MEDFORD PARKS & RECREATION

HEALTHY LIVES. HAPPY PEOPLE. STRONG COMMUNITY.

Medford Parks ADA Transition Plan

June 2016

CONTINUOUS IMPROVEMENT | CUSTOMER SERVICE

701 N. COLUMBUS AVE. | MEDFORD, OR 97501 | 541.774.2400

WWW.PLAYMEDFORD.COM | PARKS@CITYOFMEDFORD.ORG

COMMUNITY ENRICHMENT EXCELLENCE EXCEPTIONAL CUSTOMER SERVICE INNOVATION

Page Left Intentionally Blank

Acknowledgements

City Council

Gary Wheeler, Mayor
Dick Gordon, Councilmember Ward 1
Tim Jackle, Councilmember Ward 1
Clay Bearnson, Councilmember Ward 2
Eli Matthews, Councilmember Ward 2
Chris Corcoran, Councilmember Ward 3
Kevin Stine, Councilmember Ward 3
Daniel Bunn, Councilmember Ward 4
Michael Zarosinski, Councilmember Ward 4

Parks & Recreation Commission

Marie Cabler, Commissioner
Chris Corcoran, Council Liaison
Julian Cordle, Commissioner
Rich Hansen, Commissioner
Frank Hoeper, Commissioner
Kristine Jensen, Commissioner
Preston Jernigan, Youth Member
Jerry MacLeod, Commissioner
Phil Ortega, Commissioner
Dan Ratty, Commissioner
Mujahid Rizvi, Commissioner

City Staff

Brian Sjothun, Parks & Recreation Director
Rich Rosenthal, Assistant P&R Director
Pete Young, Park Planner
Bonnie C. Huard, Risk Manager & ADA Coordinator
Tim Stevens – Park Maintenance Superintendent

Page Left Intentionally Blank

Table of Contents

Chapter titles are hyperlinked

	page
Chapter 1: Introduction	1
Chapter 2: Transition Plan Development	5
Chapter 3: Universal Design Features	15
Chapter 4: Implementation	23
Chapter 5: Ten-Year Priority Lists	27
Appendix A: Accessibility Checklists	

This ADA assessment focused potential barriers to access to outdoor park and recreation facilities only, excluding buildings and structures. The findings are based on best-available resources. Re-evaluation is recommended in future years.

Page Left Intentionally Blank

ADA Title II

Title II of the Americans with Disabilities Act (ADA) covers programs, activities, services and facilities of public entities such as the City of Medford's park system. The federal ADA regulations state that a public entity must reasonably modify its policies, practices, or procedures to avoid discrimination against people with disabilities. Because ADA is a civil rights law and not a building code, older facilities are often required to be accessible to ensure that people with disabilities have an equal opportunity to participate. The purpose of this ADA transition plan is to describe the intent of how the City will pursue compliance of older facilities to meet the requirements and intention of Title II.

This plan will assist the City of Medford to identify policy, program, and physical barriers to accessibility within its park system, and to develop barrier removal solutions that will facilitate access opportunities for all individuals. There are two kinds of accessibility: program accessibility and physical accessibility. This plan focuses on the built infrastructure of the park system and its outdoor recreation facilities to address physical accessibility. Many of the potential physical barriers identified are associated with park, special use and trail facilities that have accessible features such as designated parking, access ramps, accessible play areas and equipment, accessible restrooms, accessible door hardware, and other code compliant and usable features.

The ADA Transition Plan is intended to provide a framework for the continuous improvement of City facilities for people with disabilities. This is a living document that is intended to be regularly updated as barriers are removed and new facilities come under ownership or control of the City.

Accreditation Requirement

Developing an ADA Transition Plan is also a standard requirement for maintaining accreditation in the CAPRA program. The Commission for Accreditation of Park and Recreation Agencies (CAPRA) accredits park and recreation agencies for excellence in operation and service. In order to continue as a CAPRA certified agency, Medford Parks and Recreation must continue to meet the national standards of performance for best practices. The CAPRA Standards recognize that strategic planning is vital to high performing organizations and planning activities are essential to effective agency management. Standard 2.10 – ADA Transition Plan states "The agency shall develop and adopt a phased plan for the removal of barriers at existing recreation facilities, parks, and amenities owned or operated by the agency, pursuant to the requirements of the US Department of Justice Title II regulation issued September 14, 2010 and effective March 15, 2011." The adoption of this plan will meet the agency requirement for this standard.

Requirements for Accessibility in Public Places

State and local governments must ensure that services, programs and activities, when viewed in their entirety, are accessible to people with disabilities. This is part of public entities' program accessibility obligations. Alterations to older buildings may be needed to ensure program accessibility. Generally

this is a greater obligation than "readily achievable barrier removal" which is the standard that applies to public accommodations. State and local governments are not required to take any action that would result in undue financial and administrative burdens. State and local governments' ADA obligations for program accessibility are identified in the Department of Justice's ADA Title II regulations 28 CFR Part 35.150.

ADA Transition Plan Requirements

The ADA has specific requirements for the preparation of an acceptable transition plan. According to The Americans with Disabilities Act Checklist for Readily Achievable Barrier Removal, the regulation require that architectural and communication barriers that are structural must be removed in public areas of existing facilities when their removal is readily achievable. The City of Medford is not required to take any action to meet compliance, if it can be demonstrated, that a fundamental alteration in the nature of the program or activity would result from the action, the action would create a hazardous condition, or if the action would result in an undue financial and administrative burden to the City. Factors such as the size, type, nature and cost of the access improvements needed and the overall financial resources available for the upgrades to the facility must be taken into consideration.

The Transition Plan must, at a minimum -

- Identify physical obstacles in the public entity's facilities that limit the accessibility of its programs or activities to individuals with disabilities;
- Describe in detail the methods that could be used to make the facilities accessible; and
- Specify the schedule for taking the steps necessary to achieve compliance, if the time period of the Transition Plan is longer than one year, identify steps that will be taken during each year of the transition period; and, indicate the official responsible for implementation of the plan.

This ADA transition plan is focused specifically on the City's parks and outdoor recreation facilities meeting compliance with ADA. Its implementation should be coordinated with other City ADA compliance programs and any future projects planned for in the Medford Parks and Recreation Department Capital Facilities Plan.

The ADA Planning Process

This ADA transition plan utilizes the following minimum guidelines in its development and implementation:

- Surveys to identify the physical barriers to access facilities and amenities within each existing developed park;
- Summarize the barriers and proposed solutions for removal of the barriers in each existing developed park;

- Consider public input recieved during the concurrent planning for the Leisure Services Plan update and how that input influences ADA upgrade priorities;
- Prioritize which solutions can be immediately implemented based on existing resources plans; and
- Establish a schedule for implementing the rest of the upgrades needed to achieve ADA compliance in coordination with the Leisure Services Plan update and its capital facilities plan.

After this current ADA transition planning effort, and in order to be an effective measure of the City's park system ADA compliance, the following steps should continue:

- survey documentation should be maintained to continue to track progress and record the completed work and plans kept on file;
- implement changes as planned; and
- review the implementation plan each year to re-evaluate priorities and potential improvements that have become more readily achievable.

Relationship to Other Plans

This ADA transition plan is focused specifically on the City's parks meeting compliance with ADA. This plan can serve as a stand-alone guide for addressing park and outdoor recreation facilities. However, this ADA transition plan should also be considered a subset to the citywide ADA transition plan. In many instances, barriers to park access could be addressed through improvements in the public right-of-way that may be part of a larger transportation improvement project. The value of coordinating needed ADA compliance projects can save both time and money by gaining greater efficiency. The ADA transition plan should also be coordinated with the parks' capital facilities plan. ADA upgrades can be an ongoing annual budgeted action as well as coordinated with other park capital improvements being considered over the next ten years.

Page Left Intentionally Blank

Table of Contents

Community Context

The Medford Parks and Recreation Department (MPRD) is Southern Oregon's largest provider of recreation services. The Department provides a comprehensive system of facilities and programs to meet the parks and recreation needs of the community. The Department is responsible for the care, maintenance and programming of 25 city parks, including the U.S. Cellular Community Park (USCCP) and the Santo Community Center. The Department has earned national accreditation through the National Recreation and Parks Association and its Commission for Accreditation of Park and Recreation Agencies (CAPRA) to recognize agencies that operate according to best practices in the recreation industry.

Demographic characteristics are important to note, since they influence recreational interests and participation. As population growth creates new demand for park and recreation services, factors such as age, employment, income, ethnicity and physical ability play a role in determining recreational interests. These factors may affect an individual's level of participation, as well as his or her ability and desire for active recreation.

The City of Medford is a mid-sized and growing city, home to many families with children, as well as older adults. Medford is slightly younger than the rest of Jackson County. Residents have slightly lower incomes than the County average, and one in five families live in poverty. Residents are generally active and as a result levels of obesity and overweight are low compared to the rest of the country. Medford has experienced significant growth in the past 40 years, with a 159% increase in population from 1970 to 2010.

According to the 2014 American Community Survey, Medford and Jackson County have a higher percentage of persons with disabilities (16.4% and 16.9%, respectively) than the average across the State of Oregon (14.2%). Of Medford youth 5 to 17 with a disability (7.6%), the majority has cognitive difficulties (5.7%). Among residents 65 and older, the percentage rises to 41%, or 4,937 persons, which is on par with percentages found in the general senior population of Oregon.

Leisure Services Plan Update

The Medford Parks and Recreation Department created and administered a community survey between April and June of 2015 as a component of the Leisure Services Plan (LSP) update to gather input to determine park, trail, open space and recreation priorities of the community. The major findings highlighted from the survey that relate to this ADA transition plan include:

- Permanent or upgraded restrooms ranked as the most frequently (62%) cited park improvement.
- Considering the interest in gathering spaces, the combination of picnic tables and benches with picnic shelters ranked as the most important improvement – with 46% of survey respondents selected either picnic shelters or picnic tables/benches as a desired park improvement.
- The top three actions ranked as "very supportive" by respondents were to rehabilitate older parks (70.1%), develop a new indoor recreation center/pool (59.6%), and expand programming for youth under 18 (54.6%).

Although many park playgrounds have been replaced or upgraded in recent years, 42% of community survey respondents still desire improvements to Medford's playgrounds. These expressed public needs can help direct the priorities that will be identified in the targeted ADA improvements.
The LSP update identifies the need for providing a neighborhood or community park within a reasonable walking distance (1/2 mile) for all residents to have equitable access to public outdoor recreation opportunities. The LSP gap analysis provides direction for where to target future parkland acquisitions to help increase local accessibility to park facilities.

This ADA transition plan was conducted concurrently with the LSP update and integrates its recommended ADA improvements with the LSP capital facilities plan. Additionally, the LSP includes specific goals, policies and implementation directives to address identified ADA needs and provide further universally accessible recreational opportunities for its disabled population.
The Management & Maintenance Goal (Goal 4): "to coordinate park and recreation planning, acquisition, maintenance and development to serve a broad spectrum of citizen and institutional interests" includes the task to implement and finance the upgrades for ADA compliance as noted in the ADA Transition Plan to ensure a safe, secure and accessible park infrastructure.

Park Evaluations

Priorities for Accessibility

There are four priorities that are listed in the Department of Justice ADA Title III regulations (for places of public accommodation) and are equally applicable to state and local government facilities. These priorities were used as the basis of the checklists for each park or trail facility included in the Medford park system inventory, as follows:

- Priority 1 - Accessible approach and entrance
- Priority 2 - Access to goods and services
- Priority 3 - Access to public toilet rooms
- Priority 4 - Access to other items such as water fountains and public telephones

In the survey of outdoor recreation facilities, the approach and entrance became the primary focus for providing barrier-free access to parks and trails. The accessible design of amenities within each park facility (drinking fountains, picnic tables, park benches, playgrounds, external access to public toilets, etc.) were also surveyed at each site.

Site Assessment Process

The 2010 ADA Standards for Accessible Design were used to develop the checklist in the conducted survey of facilities. In order to evaluate each of the existing developed outdoor recreation facilities, the consultant team used the developed checklist to survey the physical feature and identify and record the deficiencies and propose possible solutions for any barriers for accessibility. In March and April 2016, members of the consultant team inventoried each park to determine overall compliance with current

(2010) ADA guidelines. The goal of the survey was to identify any barriers to accessibility throughout the parks and to identify any features within each park that were not ADA compliant. As some deficiencies were identified, possible solutions for compliance were also noted.

The completed surveys are located in the Appendix and are arranged first by Ward, then in alphabetical order by park or facility name within each of the four City Council wards in Medford. The date of each survey checklist provides a datum point for the status of ADA compliance at that park facility at a particular date.

Additional survey checklists for meeting Approach and Entrance ADA requirements were used in parks that provided substantial parking areas and appeared to have some ADA compliance shortcomings. These parks included:

- Bear Creek Park
- Donahue-Frohnmayer Park
- Fitchner-Mainwaring Park
- Holmes Park, and
- Railroad Park

Site Assessment Findings

As anticipated, the level of ADA compliance across the park system varies greatly from site to site. Older facilities typically have a greater number of existing barriers. Parks with greater topographic character have more difficulty providing full accessibility to its amenities due to steeper grades compared to relatively flat park facilities. Barriers to universal access have been presented by type to summarize the findings to the parks' site assessments.

Parking and Entrances

During the survey process, the first measured level of accessibility targeted the parking lots and park/trail entrances and access points. Until persons with disabilities can approach the park facility, no recreational amenity is truly accessible. Most parks provided handicapped parking stalls and met the required quantity for designated handicapped spaces. In many cases, the signage for handicapped parking spaces was not consistently compliant. Accessible parking spaces should be identified with the International Symbol of Accessibility and located at least 60 inches above the ground. Wherever provided, van accessible spaces should include their unique "van accessible" identification on the parking sign. In larger parks, where the provision of more parking is provided, an additional level of surveying was conducted to more specifically identify any non-compliance considerations.

Site Furnishings

Across all the parks, a consistent lack of ADA-complaint picnic tables and benches was identified. The 2010 ADA regulations require that when picnic tables or benches are provided at least 50% or no less than two of the tables or benches are accessible. The degree of compliance varied greatly from park to park but almost every park that provided seating did not provide adequate access, wheelchair spaces, or full backs and armrests.

Supportive park amenities like drinking fountains pose the challenges of older fixtures that are not ADA compliant in the same parks with newer fountains that meet current accessibility expectations. Where one drinking fountain provides access, the non-compliant fountain may not need to be replaced to meet the letter of the ADA regulations. However, to ensure the provision of universal accessibility many of those older drinking fountains should be phased out as they experience deterioration from aging and weathering and replaced with fully ADA-compliant fixtures.

Playgrounds

The survey documented that access to many playgrounds was consistently problematic. Most of the playground containment areas were designed to keep the playground surfacing (wood chips, pea gravel, and rubber bits were surveyed) within the play area and out of the mown grass areas. However, the methods of containment (edging, concrete curbing, timbers, etc.) created barriers for ADA accessibility. Approximately 14 playgrounds contained barriers to universal accessibility and should be remedied with some form of playground ramp or barrier removal. In addition to access barriers, playgrounds surfaced with materials such as pea gravel and ground rubber bits did not provide the stable surface necessary for ADA access.

Although the existing play equipment was not inspected and audited by a trained and certified playground inspector, as part of this survey process, basic observations noted that older equipment, in particular, and the Leathers play structure lack the number of accessible features and transfer stations to meet full compliance. It is strongly recommended that a safety and accessibility audit be performed for each playground in the City's system. While providing access to the playground is the first step, ensuring a reasonable amount of accessible play features should follow. Additionally, playground surfacing should be replaced with engineered wood chips at the required depth to meet ASSHTO safety standards in all containment areas that used pea gravel or ground rubber bits. Existing pea gravel also does not meet play equipment fall safety standards.

Accessible Routes

Within each park, paved pathways connected the different park features and amenities. These pathways provided perimeter routes for walking and exploring and links to picnic shelters, sports courts, playgrounds and other park resources. The survey indicated that many of these paved routes did not meet ADA compliance (due to steep slopes, slanted or bumpy surfaces). In other instances, paved routes were lacking where a connection should be provided to ensure a stable surface to a picnic table, bench or playground. The checklists for each park noted which routes were not accessible. With regard to benches and picnic tables, very few of these site furnishings were connected directly with a paved path and therefore were not meeting ADA requirements. Accessible routes were also a consideration within picnic shelters where picnic table spacing did not provide adequate spacing distances for wheelchair movement, access or seating.

Along with accessible routes, the need for detectible warnings strips was noted wherever paved pathways enter traffic or parking areas. Detectible warnings strips were notably lacking in the older parks or where secondary pathways connections led to older streets without current ADA sidewalks standards.

Summary Findings

To provide an overview of the barriers to full ADA compliance within Medford's park system, Table 1. summarizes the different categories of identified barriers within parks based on ward location.

TABLE 1. Identified Barriers to ADA Compliance

		Identified Barriers to ADA Compliance**									
Ward	Park / Facility	Parking	Restrooms	Accessible Routes	Benches	Picnic Tables	Playgrounds	Play Eqt	Sports Field Seating	Drinking Fountains	ADA Park "Score"
1	Cedar Links Park (undeveloped)	n/a	n/a	n/a	n/a	n/a	n/a	n/a	n/a	n/a	n/a
1	Donahue-Frohnmayer Park	2	3	3	3	3	3	0	0	0	1.9
1	Kennedy Park	n/a	n/a	2	3	3	n/a	n/a	n/a	n/a	2.7
1	Lone Pine Park	2	0	2	3	3	n/a	n/a	n/a	0	1.7
2	Alba Park	n/a	n/a	0	3	3	n/a	n/a	n/a	1	1.8
2	Bear Creek Park	2	0	3	3	3	3	3	0	1	2.0
	Little League Fields	1	2	1	3	3	3	1	3	3	2.2
2	Fitchner-Mainwaring Park	2	1	2	3	3	3	2	2	1	2.1
2	Hawthorne Park	2	0	2	3	3	3	0	n/a	0	1.6
2	Jefferson (school) Park	n/a	n/a	3	n/a	n/a	n/a	n/a	3	n/a	3.0
2	Lewis Park	0	0	1	3	3	0	0	n/a	0	0.9
2	Pear Blossom Park	0	0	3	0	3	0	3	n/a	1	1.3
2	Union Park	2	unk.	3	3	3	3	3	n/a	1	2.6
2	US Cellular Community Park	0	1	2	0	3	n/a	n/a	0	1	1.0
	Coyote Trails Nature Center	2	n/a	2	n/a	3	n/a	n/a	n/a	n/a	2.3
2	Veterans Park	1	0	1	3	3	n/a	n/a	n/a	n/a	1.6
2	Vogel Plaza	n/a	n/a	2	0	3	n/a	n/a	n/a	0	1.3
3	Howard Park	3	n/a	3	n/a	n/a	n/a	n/a	3	n/a	3.0
3	Jackson Park	2	0	3	3	3	3	3	2	2	2.3
3	Liberty Park	n/a		1	3	3	0	0	n/a	0	1.2
3	Midway park (undeveloped)	n/a	n/a	n/a	n/a	n/a	n/a	n/a	n/a	n/a	n/a
3	Railroad Park	2	0	1	n/a	n/a	n/a	n/a	n/a	1	1.0
3	Santo Community Center	n/a	n/a	n/a	n/a	n/a	n/a	n/a	n/a	n/a	n/a
4	Earhart Park	n/a	n/a	3	3	3	n/a	n/a	n/a	n/a	3.0
4	Holmes Park	3	3	3	3	3	0	0	n/a	1	2.0
4	Orchard Hill Park	3	n/a	3	n/a	n/a	n/a	n/a	3	n/a	3.0
4	Oregon Hills Park	0	0	0	1	3	2	3	n/a	0	1.1
4	Ruhl Park	3	3	0	3	3	3	0	n/a	1	2.0
4	Summerfield Park	2	0	0	3	3	3	3	n/a	0	1.8
	Average:	**1.7**	**0.8**	**1.9**	**2.5**	**3.0**	**2.1**	**1.5**	**1.8**	**0.7**	**1.9**

**Projects ranked using #1, 2, or 3 according to significance of non-compliant barriers: ranging from technical, minor, or major barriers

Table 1 uses a rating system as follows:

#0 = Amenity rating with accessible characteristics
#1 = Technical non-compliance does not meet the exact measurements for full compliance due to age, weathering, ground settlement, or a related inaccessiblity.
#2 = Minor barrier creating non-compliance can be repaired, replaced or reconstructed with limited resources, includes ADA improvement needs such as newly mounted parking signs, parking lot striping and adding detectible/tactile warning strips.
#3 = Major remedies needed for barrier removals such as regrading parking lots, accessible trails, playground ramps, play equipment designed for universal accessibility.
"n/a" implies lack of specific amenity

Averages that are totaled in the bottom row of Table 1 indicate the degree of improvements needed to bring the different categories of park amenities up to ADA compliance. Since the averages only measure areas where there was a non-compliant feature, they do not reflect the degree of ADA compliance for the overall park system – only the need for attention to the category of park amenity.

Bear Creek Greenway Site Assessment

The Bear Creek Greenway contains a 20-mile regional shared-used paved path that extends from Ashland through Talent, Phoenix, Medford and Central Point. The care and maintenance of the path is provided by a combination of the county and the local jurisdictions. Medford contains approximately seven (7) miles of the greenway path between Mile 17 and just past Mile 24. In Medford, the Bear Creek Greenway (BCG) path runs adjacent or through several park facilities where trailhead parking and local access is available for BCG trail users. These facilities include U.S. Cellular Community Park, The Coyote Trails Nature Center, Bear Creek Park, Hawthorne Park and Railroad Park.

Within these public parks, the BCG path may be part of the system of outdoor recreation accessible routes (ORARs) to different park amenities that provide or support outdoor recreation activities. As part of the system of required accessibility, those sections of the BCG path should be ADA compliant or another route within the park should provide access to the specific amenity within the park.

Outside of those parks, the BCG path is not being considered as an outdoor recreation access route (ORAR) in the scope of this ADA transition plan. The U.S. Access Board defines an ORAR as a continuous, unobstructed path that is "intended for pedestrian use and that connects accessible elements, spaces and facilities" within parks. While the BCG path provides that value within some park areas, it's primary purpose serves as both outdoor recreation experience and an alternative transportation route connecting several communities along the Greenway.

Title II of the ADA states that "a public entity may not deny the benefits of its programs, activities and services to individuals with disabilities because its facilities are inaccessible." The ADA guidelines mandate that the public entity follows a process to address accessibility, but do not mandate that all trails must be accessible. However, the guidelines do apply to any new trail construction and any trail

alterations beyond simple maintenance. For the BCG path, this requirement would apply to any changes in overall grade, width, or surface of the existing trail or significant reroute of the path.

In addition to the path itself, any trailhead facilities should also be accessible with designated accessible parking and a clear route from parking to the path. When outdoor constructed features (bench, drinking

TABLE 2. Trail Slope Allowances

Trail Running Slopes	
Allowable Grade	**Distances**
0-5%	for any distance
5.1-8.3%	up to 200 feet
8.3-10%	up to 30 feet
10.1-12%	up to 10 feet
>12%	not allowed

fountain, etc.) are provided at trailheads or along the path at least 20% but not less than one of each feature should be accessible at each location. If Medford pursues complete accessibility for its section of the BCG path, signs should also be added with path information that includes the length of fully accessible segments, elevation change, cross slope, running slope, path width and typical surface to inform the path user of what to expect along the route. This information is best convey through the use of universal icons.

Although this transition plan does not consider that the BCG path is an ORAR, an assessment was conducted to identify any existing challenges or barriers to the path providing complete ADA accessibility. In order to be completely ADA accessible, the BCG path must meet the technical requirements for surface, clear width, passing spaces, obstacles, openings, running slope, cross slope, resting intervals and protruding objects.

As the BCG path continues through Medford, its existing conditions sometimes do not meet all the technical requirements for universal accessibility. The two most prevalent recurring challenges on the path relate to portions of its running slope being too steep and obstacles/openings in the pavement as it ages from root damage and asphalt crack expansion. For a path to be ADA compliant, the running slope (or linear grade) should be within the parameters outlined in Table 2 above. Most of the seven miles of BCG path within Medford is already ADA compliant. Exceptions to this accessibility were noted during the transition plan inventory.

From south to north through the City, barriers for ADA compliant included:

- Pavement obstacles from root upheavals between mile marker 17 and mile marker 18;
- Pavement cracking in segment from mile marker 18 to U.S. Cellular Community Park;
- Missing detectible warning strips on connecting trail segments in U.S. Cellular Community Park near the Coyote Trail Nature Center;
- The underpass at Cottage Street exceeds 20% running slope;

- Access ramps onto the BCG trail from Cottage and 10th Streets exceed 10% for more than 10 feet;
- A segment between mile marker 21 and 22 exceeds 10% for more than 10 feet but less than 30 feet.

As repairs to the trail or street improvements occur adjacent to trail access points are conducted, improvement projects should include removal of these barriers, listed above, to more universal accessibility

Project Prioritization

Once the inventory of existing accessible conditions has been surveyed, the prioritization of the recommended repairs, upgrades and replacements provides an implementation strategy for achieving the desired level of universal accessibility within a reasonable time frame based on available resources. Since the improvements exceed existing resources for immediate implementation of all recommended ADA improvements, this ADA transition plan presents a set of criteria for phasing the necessary projects in the park system with the City's expected funding resources.

Prioritization Criterion

The goal for prioritization is to identify the most important ADA projects for addressing immediate non-compliance as well as the most efficient means to addressing the range of ADA compliance issues. The priorities consider the hierarchy of park access and use, the potential distribution across all four City Council wards to ensure geographic equity for access, the unique or special character of the park features and their need for ADA compliance, the proximity of public transportation and the potential timing of maintenance improvements or other capital improvement projects.

The fundamental criteria are as follows:

Park Accessibility

The park entrance and approach (parking, curb ramps, signage, etc.) ranks the foremost for accessibility followed by pathways and restrooms. These park features provide the foundation for entering and enjoying the park. If the entrance, approach and connections in the park are non-compliant, park users with disabilities or mobility limitations will not be able to enjoy the other features or amenities in the park.

Geographic Distribution

The ADA transition plan looks at the four wards within the City of Medford as the basic structure for assessing a reasonable and equitable distribution of ADA compliant parks and special facilities. While the character and sizes of the wards varies, the plan seeks to ensure maximum access for all residents and considers the level of non-compliance issues within each ward to address any potential inequities of geographic location.

Public Transportation and Walkability

Often disabled and/or handicapped citizens live in proximity to public transportation that provides their link to goods and services within the community. Parks that are within reasonable proximity to public transportation routes or provide amenities that would warrant public van transportation should be given higher consideration.

Localized Public Need

Park facilities that have been identified by residents (often within the immediate neighborhood) as needing more accessible facilities should be highlighted as a priority to address current requests for better access and accommodations.

Park Uniqueness

The special character or uniqueness of a facility may be an indication of the importance of the facility to the community. When a park's character, natural resources, or special amenities or uses are not available in other public places, accessibility is more critical to ensure the avoidance of discriminating any sector of the population.

Level of Use by the Public

The level of actual use by the public varies between parks and outdoor recreation facilities. Parks and special use facilities that receive a high level of use should be given a higher priority to provide a broader spectrum of the population has universal access. While actual numbers of park users may not be available, community parks that support large numbers of different users would receive a higher priority for ADA improvements than a small neighborhood park serving a more local population. A relative correlation between amount and diversity of outdoor recreation amenities and level of use should be expected.

Timing of Maintenance Improvements

To gain greater efficiencies, this plan also considers how some ADA repairs or upgrades can be integrated into normal maintenance routines. As upgrades or improvements are scheduled for each park, the ADA non-compliance projects within the park should be considered for incorporation to the extent possible. More significant projects that are included in the capital facilities plan should ensure that ADA compliance is part of the new or improvement project.

Existing Funding

Several park facilities have earmarked funds within the current biennial budget that may have existing capacity to address ADA improvement projects within the scope of other planned capital improvements. The City could also explore the possibility of using funds within the Risk Management Program to address these improvements.

.

Page Left Intentionally Blank

Table of Contents

Overview of ADA

Most public parks have a combination of recreational facilities (sports fields and courts, playgrounds, etc.), outdoor constructed features (picnic facilities, benches, viewing areas, grills, etc.) and trails. Access to the park facility may be from the public right-of-way, through a provided parking lot or both. The ADA Transition Plan surveyed the existing built environment that included the entrance and approaches into the parks and its circulation patterns connecting the constructed features within the park. This chapter of the Transition Plan offer some illustrative views of the existing non-compliant park amenities in Medford's parks and some "best practice" design approaches that could be implemented to achieve compliance.

Parking: Entrances and Approaches

Meeting ADA parking guidelines requires provision of the minimum number of accessible spaces per overall provided parking spaces. The checklists contains the proportion of adequate parking spaces and the number of van-accessible spaces. Widths of accessible and van-accessible spaces were measured and noted in the checklists for any park with significant parking lots.
The required signs for identifying accessible parking spaces must be mounted at least 60 inches above the ground. As noted in the checklists, many of Medford's park did not have these parking signs mounted at the correct height.

Figure 1. Some existing parking signs are mounted too low for designated spaces.

Figure 2. The minimum height for parking space signs is 60 inches.

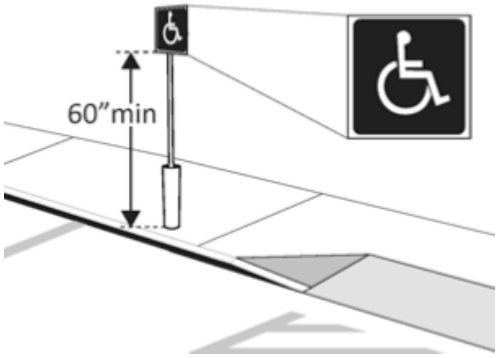

While most parking spaces were adequately sized in the parks, several accessible spaces did not have their painted access aisles aligned with the park entrances. The access aisle should be aligned with direct access into the park without the need to enter traffic or vehicular circulation areas.

Outdoor Recreation Access Routes (ORAR)

According to the U.S. Access Board, "an ORAR is a continuous, unobstructed path that is intended for pedestrian use and that connects accessible elements, spaces, and facilities within camping and picnic facilities and at viewing areas and trailheads." To ensure that all constructed features within a park are accessible, an outdoor recreation access route would connect park users from their point of entrance to the various outdoor recreation elements within each park. Where no accessible features exist along a built trail that is not critical to connecting access, that trail is not considered an ORAR.

ORARs typically are the same path as the main circulation paths within each path. While there may be several circulation pathways within parks, at least one ORAR must connect from the accessible parking spaces or other arrival points to those outdoor constructed features intended for public enjoyment.

The surveying process that inventoried primary routes within each park measured the running slope, cross slope, pathway width and passing spaces. The surface of the route and any openings or obstacles were also noted on the checklists.

Figure 3. A smart level was used in the park and trail surveying process to evaluation running and cross slopes for accessible routes.

Figure 4. Pavement with cracks greater than 1/2 inch were noted in the survey checklists.

Outdoor Constructed Features

Benches

Most of Medford's park benches are located offset by several feet from the main paved circulation paths within its parks. While the benches may be dispersed evenly throughout the park, their location in the grass or a step below the path pavement creates a barrier to accessible use. Bench heights (between 17 and 19 inches above the ground) are more difficult to manage when located in the grass or on impermanent surfaces. Benches with armrests should be provided on 50% of the accessible benches. Clear space adjacent to the bench to provide for companion seating is also an ADA guideline.

As Medford adds accessible benches to its many parks to reach the recommended guidelines for accessibility, the examples below provide an illustration of the features to incorporate into bench design and placement. Note the full back, armrests, clear ground space adjacent to the bench and the offset distance from the paved path to avoid any intrusion into the path.

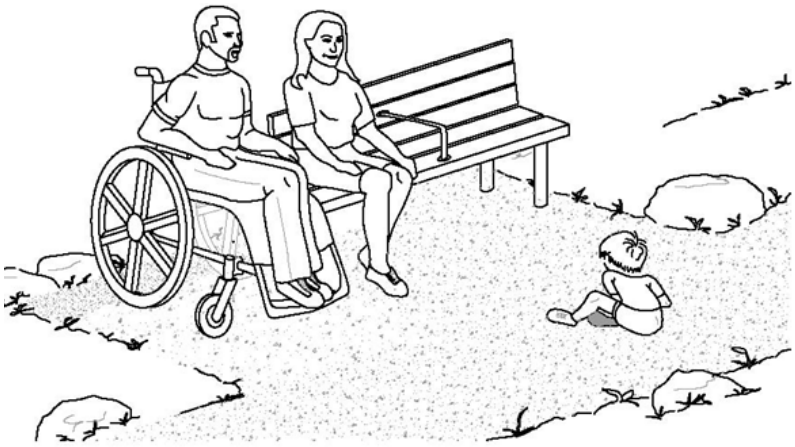

Figure 5. An illustration from the ADA manual depicts the space adjacent to a park bench.

Figure 6. Existing typical park bench without armrests, wheelchair spaces or firm and stable surface.

Figure 7. Example of ADA-compliant park bench with wheelchair space and firm, stable surface.

Picnic Tables

When picnic tables are provided for common use in public areas, at least 20 percent, but no less than one, should comply with the technical requirements for knee space. Accessible tables should contain knee spaces at least 27 inches high, 30 inches wide and 19 inches deep.

Picnic tables also require clear ground space for mobility measuring 36 inches on all usable sides of the picnic table. The ground surface should be firm and stable. Within a picnic shelter, picnic tables should be spaced such that all areas of the table are accessible.

Figure 8. Existing picnic table without any wheelchair spaces and not on a firm and stable surface.

Figure 9. Example of an ADA-compliant picnic table with wheelchair space and connected to an accessible route.

Recreation Facilities

Sports Team Seating

Where provided, fixed team or player seating areas must contain the number of wheelchair spaces and companion seats required by ADA (based on the number of seats provided), but not less than one space. One option is to provide a clear space adjacent to a fixed bench, with the bench serving as companion seating. In Medford's parks that contain sports fields, a wide range of accessibility was surveyed, extending from the complete absence of any accessible routes the natural grass fields and sand volleyball courts at Fitchner-Mainwaring to the constructed and accessible fields and viewing areas at US Cellular Community Park.

Some distinction was made between ADA seating and accessible routes and the older design of multi-tiered bleachers in several sports facilities. Newer bleacher designs now apply full side and back rails to provide fall protection and to meet international building code requirements. As resources are available these older bleachers without this fall protection should be replaced with more current and safer designed seating.

Playground Access

The playgrounds in most of Medford park system are surfaced in wood chips to provide a safety fall cushioning, however, those wood chip areas are contained by means that create a barrier to any ADA access. Therefore, many parks have no play components on an accessible route. Removal of these barriers may require creating openings in the wood chip surface containment circle/ring or the construction of a concrete ramp extending into (and beneath) the surface of the wood chips.

Figure 10. Existing barrier to playground access due to dropoff height at curb.

Figure 11. A ramp into the safety surfacing can provide an accessible route into the playground.

Play Equipment

Different types of play components provide different play experiences for children that include but are not limited to swinging, rocking, sliding, spinning and climbing. These play components may be elevated or at ground level. At least one of each play component should be on an accessible route.

Once an accessible route is provided, each playground should ensure that an accessible route exists to at least one of each ground-level play component. Play components in general should be integrated for use

Figures 12 & 13. Liberty and Lewis Parks provide good examples of playground access routes and a variety of ground level and elevated play options.

by all children. Newer play structures (since 2010) provide transfer platforms for children with mobility disabilities to gain access to elevated play components. Currently, Liberty, Lewis and Pear Blossom Parks have accessible playgrounds. This site assessment did not examine inaccessible playground structures. With the creation of accessible routes, the rest of Medford's park playgrounds should be upgraded to provide a wider range of accessible play options.

Trails and Paths (not ORARs)

Pathways that are not essential for providing an accessible route to amenities within the park system can take many forms. Some paved paths that provide alternative routes within a park do not have to meet ADA compliance if reasonable access is provided on another route. Trails on public lands provide a recreation service and a public entity may not deny the benefits of its services to individuals with disabilities, however, the ADA guidelines do not mandate that all trails be accessible. Many trails provide a variety of recreational experiences that would be radically altered if redesigned to be ADA compliant. In general, Medford needs to consider how and where the degree of accessibility is feasible to provide some level of access for trail experiences and its necessary accessible support facilities.

The ADA guidelines apply to pedestrian trails or multi-use trails with a pedestrian component that are connected to a trailhead or an accessible trail. The mountain bike and equestrian trails specifically designated for those uses (as in Prescott Park) are exempt from the accessibility guidelines for pedestrian routes. The Bear Creek Greenway has limited trailheads along its 20-mile stretch. Those trailheads would benefit from trail signs that provided accessibility information for the trail segments served by the trailhead. As illustrated in the image (Figure 14), accessibility information can be conveyed through universal icons displaying trail cross slope, running slope, width, surface and expected segment length (until next trailhead or inaccessible section).

Figure 14. Sample of trail sign with accessibility information

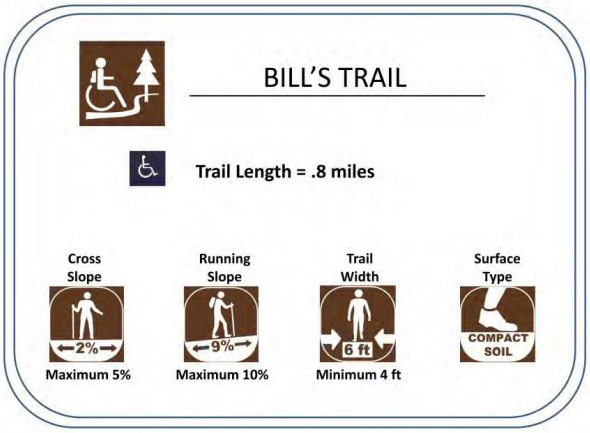

In the ADA checklist survey for the Bear Creek Greenway regional trail, several locations had pavement that had expanded and created wide gaps or heaved from root damage. These openings in the trail are more than the ½ inch tolerance for providing accessibility. While most gaps are perpendicular to the trail direction, their widening nature will increase the tripping hazard and ADA barrier if not repaired.

Figure 15. Gaps in pavement that are greater than 1/2 inch along accessible routes should be repaired.

Other Amenities

Considerations for providing universal access to all park and trail users extends beyond the higher priority facilities and their entrances and travel routes. Amenities such as drinking fountains, Mutt Mitt dispensers, trash cans, signage, kiosks, and similar supplementary items should also be placed within reach and available for use. Medford's more recent park improvements have included accessible drinking fountains. Most trash cans throughout the park system are highly mobile and within reach of paved pathways. However, most Mutt Mitt dispensers (for dog waste bags) are mounted at heights unreachable from a wheelchair and off the paved path. Trail and park kiosks are often located off the paved path without clear space on a firm and stable surface that ensures ADA access.

Figure 16. Mutt Mitt dispensers can be out of reach if located off the trail and mounted too high.

Page Left Intentionally Blank

To meet the goals for the transition plan, the Medford Parks and Recreation Department will be integrating the identified ADA compliance repairs and improvements with their capital facilities plan and in collaboration with other city departments and their capital projects. The City is addressing the overall need to continue with walkability improvements in the public right-of-way as part of ongoing road modifications. As local parks become more walkable, the park pedestrian and bicycle entrances may require further scrutiny to ensure safe ingress and egress as well as universal accessibility.

Costs for Barrier Removal

The transition plan identified barriers to universal accessibility across the physical infrastructure of outdoor recreation facilities in Medford. The implementation costs for addressing and/or removing those barriers has been provided in the table below. (Table 3) The cost estimates were based on standalone implementation prices using standard design approaches for repairing or improving access. These identified barriers could be combined with other improvements; bundled with similar projects; or designed more creatively in ways that could generate cost savings. The cost estimates were intended for planning purposes to guide the ten-year implementation for achieving the complete removal of ADA barriers in parks facilities. No inflation factor was integrated into the estimates so costs may vary over time and within the parameters of specific locations or construction constraints such as the need for environmental permitting or special access equipment. If all barriers were removed in the current fiscal year the estimated costs across the park system would be $680,250.

Since capital improvements and ADA repairs are continually subject to changing construction costs, the overall cost of the ADA compliance program and individual costs for barrier removal may be highly variable. Some identified projects may be fiscally or physically impractical to immediately renovate facilities to address compliance. The approach taken by many similar jurisdictions is to set aside a reasonable goal with the capital facilities plan for annual spending towards ADA compliance. The Department already has the policy to provide ADA compliance within new projects.

Costs for removal of barriers to ADA compliance were also broken down by the four wards within the City of Medford. The wards contain a variety of parks with different ages and types. Ward 2 has the majority of community parks where more infrastructure and amenities typically trigger more barrier removal costs.

Schedule

The scheduling of proposed ADA upgrades and improvements should consider the prioritization criteria described in Chapter 2 of this transition plan. As the City reviews its capital projects each year against the list of outstanding compliance issues, those priorities can help identify the ranking for sequencing project implementation. The City should also allow for some flexibility to accommodate community requests, other departments' priorities and opportunities to partner both within city departments and with outside agencies and organizations. To best capture efficiencies in program implementation, the Department should review the schedule for projects on an on-going basis.

Table 3. Cost estimates for park projects within each City Council Ward.

Ward	Park	ADA costs	Subtotals
1	Cedar Links Park (undeveloped)	n/a	
1	Donahue-Frohnmayer Park	$59,750	
1	Kennedy Park	$4,500	
1	Lone Pine Park	$5,000	
	Ward 1		$69,250
2	Alba Park	$6,000	
2	Bear Creek Park	$128,500	
2	Little League Fields	$67,500	
2	Fitchner-Mainwaring Park	$25,500	
2	Hawthorne Park	$21,500	
2	Jefferson (school) Park	$27,500	
2	Lewis Park	$7,000	
2	Pear Blossom Park	$24,000	
2	Union Park	$19,500	
2	US Cellular Community Park	$7,500	
2	Coyote Trails Nature Center	$5,500	
2	Veterans Park	$7,000	
2	Vogel Plaza	$1,000	
	Ward 2		$348,000
3	Howard Park	$39,500	
3	Jackson Park	$62,000	
3	Liberty Park	$3,500	
3	Midway park (undeveloped)	n/a	
3	Railroad Park	$2,500	
	Ward 3		$107,500
4	Earhart Park	$18,000	
4	Holmes Park	$18,500	
4	Orchard Hill Park	$39,000	
4	Oregon Hills Park	$42,500	
4	Ruhl Park	$17,750	
4	Summerfield Park	$19,750	
	Ward 4		$155,500
	Total ADA Upgrades	$680,250	

Funding

Funding sources identified for the proposed ADA upgrades are directly tied to the implementation of the Leisure Services Plan (LSP) and the Capital Facilities Plan. Some specifically identified park have funds remaining in their budgets for capital improvements as identified in the scheduling section above, other parks have recently undergone master plans (Donahue-Frohnmayer and Howard Park) where ADA upgrades can be integrated into the timing of phased implementation of those master plan projects. The ADA transition plan implementation is anticipated to be combined with the LSP to assist in pursuing additional options for funding including grants and inter-departmental collaboration.

Due to available budgets for specific park improvements, funds are currently available that could be used to address ADA upgrades and improvements in the following parks within the current fiscal cycle:

- Hawthorne Park – All identified issues
- U.S. Cellular Community Park – All identified issues
- Vogel Plaza – All identified issues
- Railroad Park – All identified issues
- Oregon Hills Park – All identified issues
- Holmes Park – Re-strip parking and add detectible warning strips

Program Responsibility

With the number of projects identified throughout the park facilities, it is expected that the responsibility for improvements will be shared amongst several departments and identified staff. For example, detectible warning strips could be incorporated into public rights-of-way projects and road modifications, upgrades to compliant benches and tables could sequenced with replacements and other improvements by parks maintenance staff, playground ramps designed by the park planner/landscape architect, and park accessibility improvements communicated via the web, public media through the parks communication staff and the city ADA coordinator. Overall, the responsibility for addressing universal accessibility lies with the Medford Parks and Recreation Department.

Equitable Distribution of Universal Accessibility

The ADA transition plan identified existing barriers for achieving compliance within Medford's outdoor recreation system. Estimated costs for barrier removal have been provided for each park facility and across each of the four wards in Medford. Implementation of the ADA transition plan would provide Medford with an ADA compliant park system most likely achievable within the next 5-10 years. However, removal of barriers does not ensure complete universal access to all outdoor recreation facilities across the city. The ability of residents to access the park and trail amenities they desire may also be influenced by walkable or public transit routes and the types of desired amenities within their local parks. A further exploration of the distribution of recreational amenities particularly unique facilities, could reveal where geographic distribution may warrant specific features added in parks within other wards. This ADA transition plan did not examine universal distribution of accessible features as the plan's focus was on barrier removal.

Ten-year Prioritization List

To provide a starting point for proposed program implementation, a ten-year prioritization list has identified a proposed sequence of projects for each park. The list of projects applies the prioritization criteria and existing identified funding to project the process for reaching ADA compliance in the park system. This ten-year list is a moving target where flexibility should be applied in the sequencing and regular evaluation is warranted to accomplish the City's ADA goals.

Table 4. Ten-year Prioritization Lists by City Council Ward

Page Left Intentionally Blank

Ten-Year Prioritization Lists by City Council Ward

Ward	Park	ADA costs	Project description	2016	2017	2018	2019	2020	2021	2022	2023	2024	2025
1	**Cedar Links Park (undeveloped)**	**n/a**											
1	**Donahue-Frohnmayer Park**	**$59,750**	Re-mount H/C parking signs	$250									
			Add playground ramps (2)		$3,500								
			Add ADA benches (3)			$3,000							
			Re-align pathway sections for ADA compliance					45,000					
			Add ADA picnic tables (4)						$8,000				
1	**Kennedy Park**	**$4,500**	Add detectible warning strips		$500								
			Add ADA benches (2)			$2,000							
			Add ADA picnic table (1)						$2,000				
1	**Lone Pine Park**	**$5,000**	Add detectible warning strips		$500								
			Add ADA benches (2)			$2,000							
			Ad ADA picnic table (1)						$2,000				
			Repair pavement at southern entrance							$500			
	Subtotal: Ward 1	**$69,250**											

MEDFORD PARKS & RECREATION
HEALTHY LIVES. HAPPY PEOPLE. STRONG COMMUNITY.

Ten-Year Prioritization Lists by City Council Ward

Ward	Park	ADA costs	Project description	2016	2017	2018	2019	2020	2021	2022	2023	2024	2025
2	**Alba Park**	**$6,000**	Add ADA benches (2)			$2,000							
			Add picnic tables (2)						$4,000				
2	**Bear Creek Park**	**$128,500**	Restripe parking, Replace H/C parking signs	$2,500									
			Re-grade for accessible route to restroom		$25,000								
			Add ADA benches (6)			$6,000							
			Replace Leathers playground with universally accessible				$85,000						
			Add picnic tables (5)						$10,000				
	Little League Fields	**$67,500**	Create ADA route to restroom		$15,000								
			Create ADA route to picnic canopy platform		$10,000								
			Add ADA benches (2)			$2,000							
			Add picnic tables (2)						$4,000				
			Upgrade sports team and spectator seating								$35,000		
			Create ADA access to playground				$1,500						
2	**Fitchner-Mainwaring Park**	**$25,500**	Add missing detectible warning strips (6)		$3,000								
			Re-mount H/C parking signs	$500									
			Add accessible route to gazebo		$1,000								
			Add playground ramps (2)		$3,500								
			Upgrade handles on restroom doors		$500								
			Add ADA benches (4)			$4,000							
			Add ADA picnic tables (4)						$8,000				
			Add ADA play equipment for diversity					$5,000					
2	**Hawthorne Park**	**$21,500**	Add ADA playground ramps (2)		$3,500								
			Reduce pavement "lip" at dog park entries		$1,000								
			Add detectible warning strips at south end pathways		$1,000								
			Add ADA benches (3)			$6,000							
			Add ADA picnic tables (5)						$10,000				
2	**Jefferson (school) Park**	**$27,500**	Create H/C parking space with access (on-street)		$5,000								
			Create ADA routes to field seating areas		$16,500								
			Add ADA benches (2)			$2,000							
			Add ADA picnic tables (2)						$4,000				
2	**Lewis Park**	**$7,000**	Remove non-compliant BBQ grills	$1,000									
			Add ADA benches (2)			$2,000							
			Add ADA picnic tables (2)						$4,000				
2	**Pear Blossom Park**	**$24,000**	Add ADA route into amphitheater		$15,000								
			Provide ADA picnic tables (2)						$4,000				
			Add ground level play piece to playground								$5,000		
2	**Union Park**	**$19,500**	Upgrade H/C parking	$5,000									
			Add playground ramps		$3,500								
			Add ADA benches (2)			$2,000							
			Add ADA play equipment piece					$5,000					
			Add ADA picnic tables (2)						$4,000				
2	**US Cellular Community Park**	**$7,500**	Modify access to area beneath grandstands		$1,500								
			Add ADA picnic tables (3)						$6,000				
	Coyote Trails Nature Center	**$5,500**	Add detectible warning strips at end of pathways		$500								
			Create accessible route to one picnic table				$3,000						
			Add ADA picnic table (1)						$2,000				
2	**Veterans Park**	**$7,000**	Add detectible warning strips at end of pathways		$1,000								
			Add ADA benches (2)			$2,000							
			Add ADA picnic tables (2)						$4,000				
2	**Vogel Plaza**	**$1,000**	Add detectible warning strips for paths crossing R.O.W.		$1,000								
	Subtotal: Ward 2	**$348,000**											

MEDFORD PARKS & RECREATION
HEALTHY LIVES. HAPPY PEOPLE. STRONG COMMUNITY.

Ten-Year Prioritization Lists by City Council Ward

Ward	Park	ADA costs	Project description	2016	2017	2018	2019	2020	2021	2022	2023	2024	2025
3	**Howard Park**	**$39,500**	Create ADA path into park & to amenities				$35,000						
			Create ADA parking adjacent to park entry		$1,500								
			Add ADA bench (1)			$1,000							
			Add ADA picnic table (1)						$2,000				
3	**Jackson Park**	**$62,000**	Restripe parking & add ADA "van" space.		$2,500								
			Create accessible routes to all amenities				$25,000						
			Add playground access					$2,500					
			Add play equipment for ADA diversity					$15,000					
			Add ADA benches (4)			$4,000							
			Add ADA picnic tables (4)						$8,000				
			Add ADA drinking fountain							$5,000			
3	**Liberty Park**	**$3,500**	Add detectible warning strips		$500								
			Add ADA bench			$1,000							
			Add ADA picnic table						$2,000				
3	**Midway park (undeveloped)**	**n/a**											
3	**Railroad Park**	**$2,500**	Reconfigure H/C parking for van accessible space.		$2,500								
	Subtotal: Ward 3	**$107,500**											

MEDFORD PARKS & RECREATION
HEALTHY LIVES. HAPPY PEOPLE. STRONG COMMUNITY.

Ten-Year Prioritization Lists by City Council Ward

Ward	Park	ADA costs	Project description	2016	2017	2018	2019	2020	2021	2022	2023	2024	2025
4	**Earhart Park**	**$18,000**	Create accessible route into park		$15,000								
			Add ADA bench			$1,000							
			Add ADA picnic table						$2,000				
4	**Holmes Park**	**$18,500**	Restripe parking; add detectible warning strips,		$2,500								
			Repair paved park path, upgrade bollarded entry.		$5,000								
			Add ADA benches (3)			$3,000							
			Add ADA picnic tables (4)						$8,000				
4	**Orchard Hill Park**	**$39,000**	Create H/C parking space for park				$2,500						
			Create accessible route into park					$35,000					
			Provide sports team ADA seating								$1,500		
4	**Oregon Hills Park**	**$42,500**	Add playground access/ramps		$3,500								
			Add ADA picnic tables (2)						$4,000				
			Add ADA play equipment for diverse play options							$35,000			
4	**Ruhl Park**	**$17,750**	Realign H/C (on-street) parking space & curb ramp		$5,000								
			Create accessible route to portable (ADA) toilet		$5,000								
			Add playground ramp		$1,750								
			Add ADA benches (2)			$2,000							
			Add ADA picnic tables (2)						$4,000				
4	**Summerfield Park**	**$19,750**	Add playground ramp		$1,750								
			Add ADA play equipment for diverse play options					$15,000					
			Add ADA bench			$1,000							
			Add ADA picnic table						$2,000				
	Subtotal: Ward 4	**$155,500**											
	Total ADA Upgrades	**$680,250**	**Subtotals per year**	**$15,298**	**$164,551**	**$54,054**	**$158,057**	**$128,560**	**$114,063**	**$46,566**	**$47,569**	**$4,048**	**$4,050**

Appendix A
Accessibility Checklists

The physical ADA assessment was conducted in March 2016 and focused potential barriers to access to outdoor park and recreation facilities only, excluding buildings and structures. The following checklists denote findings observed from site visits to each of the City of Medford's park and outdoor recreation facilities.

Table of Contents

ADA Compliance Program

MEDFORD PARKS AND RECREATION DEPARTMENT

ADA ACCESSIBILITY SURVEY FOR PARK FACILITIES

Date: March 3, 2016 **Estimated Cost:**

Facility: Alba Park **Department Notified:**

Survey by: Jean Akers **Date of Notification:**

Check all applicable building codes and ADAAG publications prior to any renovation or construction. This survey is only a guideline.

ITEM				RECOMMENDATIONS
Accessible Routes[1]	**n/a**	**Yes**	**No**	**Accessible Routes**
☐ Check here if section does not apply to this park and move to next section.				
1. Does the park have accessible routes to all accessible facilities within the park?	☐	☒	☐	☐ Expand existing accessible routes as needed ☐ Construct accessible routes ☐ Note:
2. Where court sports are provided (i.e. tennis, basketball, and volleyball) are there accessible routes to each court? (Routes must connect both sides of the court)	☒	☐	☐	☐ Expand existing accessible routes as needed ☐ Construct accessible routes ☐ Note:
3. Are there accessible routes to any and all animal containment areas?	☒	☐	☐	☐ Expand existing accessible routes as needed ☐ Construct accessible routes ☐ Note:
4. Are there detectable warnings anywhere a route crosses a traffic way?	☐	☒	☐	☐ Repair as needed ☐ Note: **Public ROW**
ITEM				**RECOMMENDATIONS**
Parking and Drop-off Areas	**n/a**	**Yes**	**No**	**Parking and Drop-off Areas**
☒ Check here if section does not apply to this park and move to next section.				
5. Are an adequate number of accessible parking spaces available? The table below gives the ADAAG requirement for new construction and alterations (for lots with more than 100 spaces refer to ADAAG). Accessible Spaces per Overall spaces	☐	☐	☐	☐ Reconfigure a reasonable number of spaces by repainting stripes. ☐ Construct accessible routes ☐ Note:

Total Spaces	Accessible Spaces Required
1 to 25	1 space
26 to 50	2 spaces
51 to 75	3 spaces
76 to 100	4 spaces

[1] Accessible routes must comply with ADAAG provisions for the location, width (minimum 36 inches) passing space, head room, surface, slope (Maximum 1:12 (or 8.33%). Accessible routes must connect all accessible elements within the facility. Accessible routes must be stable, firm and slip resistant. There is no requirement to change the surface of a playing field to an accessible surface.

6. Are an adequate number of van accessible spaces provided? At least 1 of every 8 accessible spaces must be van-accessible (with a minimum of 1 van-accessible space in all cases.)	☐	☐	☐	☐ Reconfigure to provide van-accessible space(s).
7. Are the access aisles part of the accessible route?	☐	☐	☐	☐ Add curb ramps. ☐ Reconstruct sidewalk
8. Are the accessible spaces closest to the accessible entrance?	☐	☐	☐	☐ Reconfigure spaces.
9. Are accessible spaces marked with and International Symbol of Accessibility? Are there signs reading "Van Accessible" at van spaces?	☐	☐	☐	☐ Add signs, placed so that they are not obstructed by cars.
10. Is there an enforcement procedure to ensure that accessible parking is used only by those who need it?	☐	☐	☐	☐ Implement a policy to check periodically for violators and report them to the proper authorities.
Team Player Seating Areas	**n/a**	**Yes**	**No**	**Team Player Seating Areas**
☒ Check here if section does not apply to this park and move to next section.				
11. Do fixed team or player seating areas contain the required number of wheelchair spaces and companion seats required by ADAAG?	☐	☐	☐	☐ Renovate as needed ☐ Install accessible seating area ☐ Note
Restrooms	**n/a**	**Yes**	**No**	**Restrooms**
☒ Check here if section does not apply to this park and move to next section.				
12. If rest rooms are available to the public, is at least one rest room (either one for each sex, or unisex) fully accessible?	☐	☐	☐	☐ Reconfigure rest room. ☐ Combine rest rooms to create one unisex accessible rest room. ☐ Note:
13. Are there signs at inaccessible rest rooms that give directions to accessible ones?	☐	☐	☐	☐ Install accessible signs. ☐ Note:
14. Is there tactile signage identifying rest rooms? *Note: Mount signs on the wall, on the latch side of the door, complying with the permanent signage.*	☐	☐	☐	☐ Add accessible signage, placed to the side of the door, 60 inches to centerline (not on the door itself). ☐ If symbols are used, add supplementary verbal signage. ☐ Note:
15. Are pictograms or symbols used to identify rest rooms, and, if used, are raised characters and braille included below?	☐	☐	☐	☐ If symbols are used, add supplementary verbal signage with raised characters and braille below pictogram symbol. ☐ Note:
16. Is the doorway at least 32 inches clear?	☐	☐	☐	☐ Install offset (swing-clear) hinges. ☐ Widen the doorway. ☐ Note:
17. Are doors equipped with accessible handles (operable with a closed fist), 48 inches high or less?	☐	☐	☐	☐ Lower handles. ☐ Replace knobs or latches with lever or loop handles. ☐ Add lever extensions. ☐ Install power-assisted or automatic door openers. ☐ Note:

18. Can doors be opened easily (5 lbf maximum force)?	☐	☐	☐	☐ Adjust or replace closers. ☐ Install lighter doors. ☐ Install power-assisted or automatic door openers. ☐ Note:
19. Does the entry configuration provide adequate maneuvering space for a person using a wheelchair? *Note: A person using a wheelchair needs 36 inches of clear width for forward movement, and a 5-foot diameter clear space or a T-shaped space to make turns. A minimum distance of 48 inches clear of the door swing is needed between the two doors of an entry vestibule.*	☐	☐	☐	☐ Rearrange furnishings such as chairs and trash cans. ☐ Remove inner door if there is a vestibule with two doors. ☐ Move or remove obstructing partitions. ☐ Note:
20. Is there a 36-inch-wide path to all fixtures?	☐	☐	☐	☐ Remove obstructions. ☐ Note:
21. Is the stall door operable with a closed fist, inside and out?	☐	☐	☐	☐ Replace inaccessible knobs with lever or loop handles. ☐ Add lever extensions. ☐ Note:
22. Is there a wheelchair-accessible stall that has an area of at least 5 feet by 5 feet, clear of the door swing, OR is there a stall that is less accessible but that provides greater access than a typical stall (either 36 by 69 inches or 48 by 69 inches)?	☐	☐	☐	☐ Move or remove partitions. ☐ Reverse the door swing if it is safe to do so. ☐ Note:
23. In the accessible stall, are there grab bars behind and on the side wall nearest to the toilet?	☐	☐	☐	☐ Add grab bars. ☐ Note:
24. Is the toilet seat 17 to 19 inches high?	☐	☐	☐	☐ Add raised seat. ☐ Note:
25. Does one lavatory have a 30-inch-wide by 48-inch-deep clear space in front? *Note: A maximum of 19 inches of the required depth may be under the lavatory.*	☐	☐	☐	☐ Rearrange furnishings. ☐ Replace lavatory. ☐ Remove or alter cabinetry to provide space underneath. Make sure hot pipes are covered. ☐ Move a partition or wall. ☐ Note:
26. Is the lavatory rim no higher than 34 inches?	☐	☐	☐	☐ Adjust or replace lavatory. ☐ Note:
27. Is there at least 29 inches from the floor to the bottom of the lavatory apron? (Excluding pipes)?	☐	☐	☐	☐ Adjust or replace lavatory. ☐ Note:
28. Can the faucet be operated with one closed fist?	☐	☐	☐	☐ Replace faucet handles with paddle type. ☐ Note:
29. Are soap and other dispensers and hand dryers within reach ranges (see page 7) and usable with one closed fist?	☐	☐	☐	☐ Lower dispensers. ☐ Replace with or provide additional accessible dispensers. ☐ Note:
30. Is the mirror mounted with the bottom edge of the reflecting surface 40 inches high or lower?	☐	☐	☐	☐ Lower or tilt down the mirror. ☐ Add a larger mirror anywhere in the room. ☐ Note:
Pit Toilets	**n/a**	**Yes**	**No**	**Pit Toilets**
31.				

☒ Check here if section does not apply to this park and move to next section.				
32. Is there a clear space of 60 inches by 60 inches adjacent to the toilet?	☐	☐	☐	☐ Repair as needed ☐ Note:
33. Does the height of the pit toilet riser comply with ADAAG 4.16.3?	☐	☐	☐	☐ Repair as needed ☐ Note:
34. Is the maneuvering space less than or equal to 1:50? (1:33 maximum allowed for drainage)	☐	☐	☐	☐ Repair as needed ☐ Note:
35. If the pit toilet has walls, are grab bars installed consistent with ADAAG 4.16.4?	☐	☐	☐	☐ Repair as needed ☐ Note:
36. Is the surface adjacent to the pit toilet firm and stable?	☐	☐	☐	☐ Repair as needed ☐ Note:
Utilities	**n/a**	**Yes**	**No**	**Utilities**
☒ Check here if section does not apply to this park and move to next section.				
37. Is the maneuvering space less than or equal to 1:50? (1:33 maximum allowed for drainage)	☐	☐	☐	☐ Repair as needed ☐ Note:
38. Is the surface adjacent to the utility firm and stable?	☐	☐	☐	☐ Repair as needed ☐ Note:
39. Are fixed water spouts located 28 inches minimum to 36 inches maximum above the ground or floor space?	☐	☐	☐	☐ Repair as needed ☐ Note:
40. Is the maneuvering space less than or equal to 1:50? (1:33 maximum allowed for drainage)	☐	☐	☐	☐ Repair as needed ☐ Note:
Drinking Fountains	**n/a**	**Yes**	**No**	**Drinking Fountains**
☐ Check here if section does not apply to this park and move to next section.				
41. Is there at least one fountain with clear floor space of at least 30 by 48 inches in front?	☐	☒	☐	☐ Clear more room by rearranging or removing furnishings. ☒ Note: **Two fountains – one has clear space**
42. Is there one fountain with its spout no higher than 36 inches from the ground, and another with a standard height spout (or a single "hi-lo" fountain)?	☐	☐	☒	☐ Provide cup dispensers for fountains with spouts that are too high. ☐ Provide accessible water cooler. ☒ Note: **38" ht.**
43. Are controls mounted on the front or on the side near the front edge, and operable with one closed fist?	☐	☒	☐	☐ Replace the controls. ☐ Note:
44. Is each water fountain cane-detectable (located within 27 inches off the floor or protruding less than 4 inches from the wall, into the circulation path?	☐	☐	☒	☐ Place a planter or other cane-detectable barrier on each side at floor level. ☒ Note: **27.5"**
Telephones	**n/a**	**Yes**	**No**	**Telephones**
☒ Check here if section does not apply to this park and move to next section.				
45. If pay or public use phones are provided, is there clear floor space of at least 30 by 48 inches in front of at least one?	☐	☐	☐	☐ Move furnishings. ☐ Replace booth with open station. ☐ Note:
46. Is the highest operable part of the phone no higher than 48 inches (up to 54 inches if a side approach is possible)?	☐	☐	☐	☐ Lower telephone. ☐ Note:
47. Does the phone protrude no more than 4 inches into the circulation space?	☐	☐	☐	☐ Place a cane-detectable barrier on each side at floor level. ☐ Note:

48. Does the phone have push-button controls?	☐	☐	☐	☐ Contact phone company to install push-buttons. ☐ Note:
49. Is the phone hearing-aid compatible?	☐	☐	☐	☐ Contact phone company to replace with hearing-aid compatible phone. ☐ Note:
50. Is the phone adapted with volume control?	☐	☐	☐	☐ Contact the phone company to add volume control. ☐ Note:
51. Is the phone with volume control identified with appropriate signage?	☐	☐	☐	☐ Add signage. ☐ Note:
52. If there are four or more public phones in the building, is one of the phones equipped with a text telephone (TT or TDD)?	☐	☐	☐	☐ Install a text telephone. ☐ Have a portable text telephone available. ☐ Provide a shelf and outlet next to phone. ☐ Note:
53. Is the location of the text telephone identified by accessible signage bearing the International TDD Symbol?	☐	☐	☐	☐ Add signage. ☐ Note:

Directional and Informational Signage	**n/a**	**Yes**	**No**	**Directional and Informational Signage**
☐ Check here if section does not apply to this park and move to next section.				
54. If mounted about 80 inches, do they have letters at least 3 inches high, with high contrast, and non-glare finish?	☐	☐	☒	☒ Review requirements and replace signs as needed, meeting the requirements for character size, contrast, and finish. ☐ Note:
55. Do directional and informational signs comply with legibility requirements? 56. (Building directories or temporary signs need not comply.)	☐	☐	☒	☒ Review requirements and replace signs as needed, meeting the requirements for character size, contrast, and finish. ☐ Note:

Seats, Tables and Counters	**n/a**	**Yes**	**No**	**Seats, Tables and Counters**
☐ Check here if section does not apply to this park and move to next section.				
50. Are the spaces for wheelchair seating distributed throughout? (Cover or uncovered gathering areas, bleachers)	☐	☐	☒	☐ Rearrange tables to allow room for wheelchairs in seating areas throughout the area. ☐ Remove some fixed seating. ☐ Note: **5 picnic tables w/o W/C spaces**
51. If picnic tables are provided, are at least 50% and no less than two of the tables, accessible?	☐	☐	☒	☐ Replace as needed ☐ Note:
52. Are knee spaces at accessible picnic tables at least 27 inches high, 30 inches wide, and 19 inches deep?	☒	☐	☐	☐ Replace or raise tables. ☐ Note:
53. Are picnic tables spaced such that all areas of the table are accessible?	☐	☐	☒	☐ Rearrange tables to allow room for wheelchairs in seating areas throughout the area. ☐ Remove some fixed seating. ☐ Note:
54. At each type of cashier counter, is there a portion of the main counter that is no more than 36 inches high?	☒	☐	☐	☐ Provide a lower auxiliary counter or folding shelf. ☐ Arrange the counter and surrounding furnishings to create a space to hand items back and forth.

				☐ Note:
55. Is there a portion of food-ordering counters that is no more than 36 inches high, or is there space at the side for passing items to customers who have difficulty reaching over a high counter?	☒	☐	☐	☐ Lower section of counter. ☐ Arrange the counter and surrounding furnishings to create a space to pass items. ☐ Note:
Fire Rings	**n/a**	**Yes**	**No**	**Fire Rings**
☒ Check here if section does not apply to this park and move to next section.				
56. Do all fire rings have a clear space extending a minimum 48" deep by 48" wide at all usable portions of the ring?	☐	☐	☐	☐ Install clear spaces as needed ☐ Note:
57. Are the clear spaces around the fire pit on a firm and stable surface?	☐	☐	☐	☐ Correct as needed ☐ Note:
58. Is the fire surface height a minimum of 9" above the ground/floor?	☐	☐	☐	☐ Construct or renovate pits to meet clearances ☐ Note:
59. Are the slopes around fire pits not more than 1:50?	☐	☐	☐	☐ Construct or renovate pits to meet clearances ☐ Note:
Cooking Surfaces, Grills, Pedestal Grills[2]	**n/a**	**Yes**	**No**	**Cooking Surfaces, Grills, Pedestal Grills**
☒ Check here if section does not apply to this park and move to next section.				
60. Are accessible cooking features dispersed throughout the area and among the types provided?	☐	☐	☐	☐ Evenly disperse cooking features ☐ Note:
61. Are accessible cooking feature surfaces installed between 15 inches and 34 inches above the ground/floor?	☐	☐	☐	☐ Install as required ☐ Note:
62. Do operating controls and mechanisms comply with current ADAAG 4.27.1 (General) 4.27.2 (Clear Floor Space and 4.27.3 (Height)?	☐	☐	☐	☐ Install as required ☐ Note:
Fixed Trash/Recycling Containers	**n/a**	**Yes**	**No**	**Fixed Trash/Recycling Containers**
☐ Check here if section does not apply to this park and move to next section.				
63. Are trash and recycling containers accessible and do they comply with ADAAG 4.27?	☐	☒	☐	☐ Replace as needed ☐ Note:
Overlooks/Viewing Areas	**n/a**	**Yes**	**No**	**Overlooks/Viewing Areas**
☒ Check here if section does not apply to this park and move to next section.				
64. Are all viewing areas on an accessible route?	☐	☐	☐	☐ Install accessible paths as needed ☐ Note:
65. Are all viewing areas constructed to provide an unobstructed view?	☐	☐	☐	☐ Repair as needed ☐ Note:
66. Is there at least one maneuvering space that complies with ADAAG 4.2.3?	☐	☐	☐	☐ Repair as needed ☐ Note:
67. Is the ground surface firm and stable?	☐	☐	☐	☐ Repair as needed ☐ Note:
68. Is the maneuvering space less than or	☐	☐	☐	☐ Repair as needed

[2] Where there is only one cooking surface, grill or pedestal grill in a provided picnic area, it shall be accessible. Where multiple cooking features are provided in a picnic area, 50 percent, but no less than 2 shall be accessible.

equal to 1:50? (1:33 maximum allowed for drainage)				☐ Note:
Telescopes/Periscopes	**n/a**	**Yes**	**No**	**Telescopes/Periscopes**
☒ Check here if section does not apply to this park and move to next section.				
69. Are at least 20%, but not less than one, telescope or periscope that complies with ADAAG 4.27?	☐	☐	☐	☐ Repair as needed ☐ Note:
70. Are the eye pieces usable from a seated position?	☐	☐	☐	☐ Repair as needed ☐ Note:
71. Is the ground surface firm and stable?	☐	☐	☐	☐ Repair as needed ☐ Note:
72. Is the maneuvering space less than or equal to 1:50? (1:33 maximum allowed for drainage)	☐	☐	☐	☐ Repair as needed ☐ Note:
Benches	**n/a**	**Yes**	**No**	**Benches**
☐ Check here if section does not apply to this park and move to next section.				
73. Where multiple benches are provided, are at least 50% consistent with this section?	☐	☒	☐	☐ Repair as needed ☐ Note: **1 bench in grass; 3 at gazebo**
74. Are accessible benches dispersed evenly throughout the park?	☐	☐	☒	☐ Disperse benches evenly throughout the park ☐ Note:
75. Of the accessible benches that are provided, do at least 50% of those benches have armrests consistent with ADAAG 4.26.3?	☐	☒	☐	☐ Repair as needed ☐ Note:
76. Are the front edges of accessible benches between 17 and 19 inches maximum above the ground/floor?	☐	☒	☐	☐ Repair as needed ☐ Note:
77. Are floor spaces adjacent to benches consistent with ADAAG 4.2.4?	☐	☐	☒	☐ Repair as needed ☐ Note:
78. Is the ground/floor surface around the accessible benches firm and stable?	☐	☒	☐	☐ Repair as needed ☐ Note:
79. Do all accessible benches have back support the full length of the bench?	☐	☒	☐	☐ Repair as needed ☐ Note:
Playground Equipment Accessibility	**n/a**	**Yes**	**No**	**Playground Equipment Accessibility**
☒ Check here if section does not apply to this park and move to next section.				
80. Is there at least one of each play component on an accessible route[3]?	☐	☐	☐	☐ Expand existing accessible routes as needed ☐ Construct accessible routes ☐ Note: bark surface
81. Is there at least one of each ground-level play component on an accessible route?	☐	☐	☐	☐ Expand existing accessible routes as needed ☐ Construct accessible routes ☐ Note:
82. Are the play components integrated for use by all children; including those with disabilities?	☐	☐	☐	☐ Ensure play components on accessible routes can be used by all children ☐ Note:
Trails	**n/a**	**Yes**	**No**	**Trails**

[3] Different types of play components are based on the general experience provided by the play component. Different types include, but are no limited to, rocking, swinging, climbing, spinning and sliding. Components may be elevated or at or below ground level.

☐ Check here if section does not apply to this park and move to next section.				
83. Is the clear width of the trail 36 inches?	☐	☒	☐	☐ Renovate as required ☐ Construct all new trails to code ☐ Note:
84. Are openings in the trail less than ½ inch? *Note: (Board slat spaces, etc. – Elongated openings should be placed so that the long dimension is perpendicular or diagonal to the dominate direction of travel.)*	☐	☒	☐	☐ Renovate as required ☐ Construct all new trails to code ☐ Note:
85. Is the trail free of constructed or natural barriers?	☐	☒	☐	☐ Remove as needed ☐ Note:
86. Are all overhead hazards maintained at a height that is sufficient for all expected users of the trail? (Remember, Objects that protrude into a pathway at a height greater than 27" are difficult for the blind or persons with visual disabilities who use canes to detect.)	☐	☒	☐	☐ Renovate as required ☐ Construct all new trails to code ☐ Note:
87. Is there a segment in the trail that has a 10% grade for more than 30 feet?	☐	☐	☒	☐ Construct level rest interval[4] ☐ Note:
88. Are all cross slopes a maximum of 3%?	☐	☒	☐	☐ Renovate as required ☐ Construct all new trails to code ☐ Note:
89. Are all tread obstacles a maximum of 1"?	☐	☒	☐	☐ Renovate as required ☐ Construct all new trails to code ☐ Note:
90. Are passing spaces (6" x 60") provided at maximum intervals of 200 ft. whenever the clear tread width is less then 60"?	☒	☐	☐	☐ Renovate as required ☐ Construct all new trails to code ☐ Note:
91. Does the trail have or require edge protection?	☐	☐	☒	☐ Renovate as required – Where provided, edge protection should be a minimum of 3". ☐ Construct all new trails to code ☐ Note:
92. Does the trail have signs that clearly indicate the type of use, rules and difficult conditions for the trail?	☐	☐	☒	☐ Renovate as required ☐ Construct all new trails to code ☐ Note:
93. Are there signs that warn users that changes in trail level or tread obstacles could not be removed?	☐	☐	☒	☐ Renovate as required ☐ Construct all new trails to code ☐ Note:
94. Are there detectable warnings anywhere a route crosses a traffic way?	☒	☐	☐	☐ Repair as needed ☐ Note: **Public ROW**
Shooting Facilities	**n/a**	**Yes**	**No**	**Shooting Facilities**
☒ Check here if section does not apply to this park and move to next section.				
95. Does the English Pit range have 60-inch diameter space with slopes not steeper than 1:48 so a wheelchair can turn around?	☐	☐	☐	☐ Renovate as needed ☐ Install accessible seating area ☐ Note
96. Do the firing benches have a wheelchair	☐	☐	☐	☐ Renovate as needed

[4] Resting intervals must be 60" minimum on length and at least as wide as the widest portion of the trail segment leading to the resting interval with a cross slope that does not exceed 3%.

accessible area with a bench between 27 and 34 inches with a minimum of 19" leg space?				☐ Install accessible seating area ☐ Note
97. If fixed firing positions are provided, at least 5% but not less than one of each type of firing position, must be served by an accessible route. Does English Pit have an accessible route?	☐	☐	☐	☐ Renovate as needed ☐ Install accessible route ☐ Note
98. Does the park have accessible routes to all target impact areas?	☐	☐	☐	☐ Expand existing accessible routes as needed ☐ Construct accessible routes ☐ Note:
Aquatic Recreation Facilities	**n/a**	**Yes**	**No**	**Aquatic Recreation Facilities**
☒ Check here if section does not apply to this park and move to next section.				
99. Is there an accessible route (36" wide) over beach areas that allow access to the water's edge?	☐	☐	☐	☐ Renovate as needed ☐ Install accessible route ☐ Note
100. Are there accessible routes with handrails that lead into designated swim areas such as ponds, lakes, etc.	☐	☐	☐	☐ Renovate as needed ☐ Install accessible route ☐ Note
Fishing piers and Platforms	**n/a**	**Yes**	**No**	**Fishing piers and Platforms**
☒ Check here if section does not apply to this park and move to next section.				
101. Does this park have a facility specifically designed and constructed for fishing?	☐	☐	☐	(Structures that were not built specifically for fishing do not need to meet ADAAG guidelines. Structures designed as fishing piers or platforms, must have an accessible route.)
102. Does the park have a gangway serving the fishing pier or platform?	☐	☐	☐	☐ Install a gangway platform – Gangway 1:12 maximum slope or at least 30 feet long. ☐ Renovate existing platform to meet code (Check specific building codes) ☐ Note
103. Does the gangway have a transition plate to the pier or platform that meets code?	☐	☐	☐	☐ Install a transition plate[5] ☐ Adjust existing transition plate to meet code ☐ Note
104. Does the gangway have handrails?	☐	☐	☐	☐ Install handrail to meet code ☐ Ensure existing rails meet code ☐ Note
105. Does the fishing pier or platform have railings, guards or handrails[6]?	☐	☐	☐	☐ Install as needed ☐ Renovate existing structure to meet code ☐ Note
106. Does the fishing pier or platform have edge protection[i]?	☐	☐	☐	☐ Install ☐ Renovate existing edge protection ☐ Note

[5] Gangways are not required to have to have landings at the end, if transition plates are provided. If the slope of the transition plate is greater that 1: 20 (5%), the transition plates must have a landing at the end of the transition plate not connected to the gangway and must comply with other ramp requirements.

[6] Where railings, guards or handrails are provided on a fishing pier or platform, at least 25 % of the rails must be 34 inches or less in height above the ground or dock so accommodate a person in a wheelchair. These railings must be dispersed as equally as possible to all areas of the fishing pier.

107. Does the fishing pier or platform have clear floor or ground space[ii]?	☐	☐	☐	☐ Install ☐ Renovate existing edge protection ☐ Note
108. Does the fishing pier or platform have sufficient turning space[iii]?	☐	☐	☐	☐ Install ☐ Renovate existing edge protection ☐ Note
Boating Facilities	**n/a**	**Yes**	**No**	**Boating Facilities**
☒ Check here if section does not apply to this park and move to next section.				
109. Is there an accessible route to the boating facilities?	☐	☐	☐	☐ Install ☐ Renovate existing route ☐ Note
110. Does the gangway to the dock or floating dock deigned to provide for a maximum 1:12 (8.33%) slope ? *Note: Not required to be longer than 80 feet. (Elevators may be used in lieu of gangways) In smaller facilities with less than 25 boat slips, the slope of the gangway may exceed 1:12, if the gangway is at least 30 feet long.*	☐	☐	☐	☐ Install ☐ Renovate existing route ☐ Note
111. Does the gangway have a transition plate to the pier or platform that meets code[iv]?	☐	☐	☐	☐ Install a transition plate ☐ Adjust existing transition plate to meet code ☐ Note

<table>
<tr>
<td>112. Where boat slips[7] are provided, does the number of accessible slips[8] comply with the table to the right?
Note: If boat slips at a facility are not identified or demarcated by length, each 40 feet of boat slip edge along the perimeter of a pier will be counted as one boat slip</td>
<td>☐</td>
<td>☐</td>
<td>☐</td>
<td>
<table>
<tr><th colspan="2">Number of Accessible Boat Slips Required</th></tr>
<tr><td>Total Slips in Facility</td><td>Minimum Accessible Slips</td></tr>
<tr><td>1-25</td><td>1</td></tr>
<tr><td>26-50</td><td>2</td></tr>
<tr><td>50-100</td><td>3</td></tr>
<tr><td>101-150</td><td>4</td></tr>
</table>
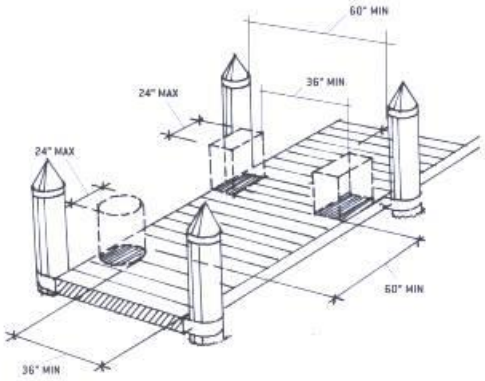

PIER CLEARANCE SPACE REDUCTION
</td>
</tr>
<tr>
<td>If the facility only has a boarding pier (see footnote # 9) at least 5% but not less than, must comply with these guidelines. The entire length of accessible boarding piers must comply with the same provisions that apply to slips.

113. Does this facility meet this regulation?</td>
<td>☐</td>
<td>☐</td>
<td>☐</td>
<td>☐ Install
☐ Renovate boarding pier
☐ Note</td>
</tr>
<tr>
<td>114. Is this facility compromised only of a boat launch with no boarding ramp or pier?</td>
<td>☐</td>
<td>☐</td>
<td>☐</td>
<td>If yes, there are no specific provisions that address access to launch ramps without boarding piers.</td>
</tr>
</table>

[7] A boat slip is the portion of a pier, main pier, finger pier, or float where a boat is berthed or moored, or used for embarking or disembarking. Boarding piers that are not part of a boat launch ramp are classified as “boat slips” for the purpose of this survey.

[8] Accessible boat slips must have clear pier space at least 60 inches wide and as long as the slip. Every 10 feet of linear pier edge serving the accessible slips must have at least one continuous clear opening that is at least 60 inches wide. The width of the clear pier space may be 36 inches wide for a length of 24 inches, as long as multiple 36-inch segments are separated by segments that are 60 inches minimum clear in width and 60 inches minimum clear in length, and the clear openings are at least 60 inches deep. Edge protection is not required

Item Number	Notes
	Mutt mitt dispenser mounted at 58" height (bottom of dispenser).

4.2.3* Wheelchair Turning Space. The space required for a wheelchair to make a 180-degree turn is a clear space of 60 in (1525 mm) diameter (see Fig. 3(a)) or a T-shaped space (see Fig. 3(b)). Appendix Note

4.2.4* Clear Floor or Ground Space for Wheelchairs.

4.2.4.1 Size and Approach. The minimum clear floor or ground space required to accommodate a single, stationary wheelchair and occupant is 30 in by 48 in (760 mm by 1220 mm) (see Fig. 4(a)). The minimum clear floor or ground space for wheelchairs may be positioned for forward or parallel approach to an object (see Fig. 4(b) and (c)). Clear floor or ground space for wheelchairs may be part of the knee space required under some objects.

4.2.4.2 Relationship of Maneuvering Clearance to Wheelchair Spaces. One full unobstructed side of the clear floor or ground space for a wheelchair shall adjoin or overlap an accessible route or adjoin another wheelchair clear floor space. If a clear floor space is located in an alcove or otherwise confined on all or part of three sides, additional maneuvering clearances shall be provided as shown in Fig. 4(d) and (e).

4.2.4.3 Surfaces for Wheelchair Spaces. Clear floor or ground spaces for wheelchairs shall comply with 4.5. Appendix Note

4.16.3* Height. The height of water closets shall be 17 in to 19 in (430 mm to 485 mm), measured to the top of the toilet seat (see Fig. 29(b)). Seats shall not be sprung to return to a lifted position. Appendix Note

4.16.4* Grab Bars. Grab bars for water closets not located in stalls shall comply with 4.26 and Fig. 29. The grab bar behind the water closet shall be 36 in (915 mm) minimum. Appendix Note

4.26.3 Structural Strength. The structural strength of grab bars, tub and shower seats, fasteners, and mounting devices shall meet the following specification:

(1) Bending stress in a grab bar or seat induced by the maximum bending moment from the application of 250 lbf (1112N) shall be less than the allowable stress for the material of the grab bar or seat.

(2) Shear stress induced in a grab bar or seat by the application of 250 lbf (1112N) shall be less than the allowable shear stress for the material of the grab bar or seat. If the connection between the grab bar or seat and its mounting bracket or other support is considered to be fully restrained, then direct and torsional shear stresses shall be totaled for the combined shear stress, which shall not exceed the allowable shear stress.

(3) Shear force induced in a fastener or mounting device from the application of 250 lbf (1112N) shall be less than the allowable lateral load of either the fastener or mounting device or the supporting structure, whichever is the smaller allowable load.

(4) Tensile force induced in a fastener by a direct tension force of 250 lbf (1112N) plus the maximum moment from the application of 250 lbf (1112N) shall be less than the allowable withdrawal load between the fastener and the supporting structure.

(5) Grab bars shall not rotate within their fittings.

4.27 Controls and Operating Mechanisms.

4.27.1 General. Controls and operating mechanisms required to be accessible by 4.1 shall comply with 4.27.

4.27.2 Clear Floor Space. Clear floor space complying with 4.2.4 that allows a forward or a parallel approach by a person using a wheelchair shall be provided at controls, dispensers, receptacles, and other operable equipment.

4.27.3* Height. The highest operable part of controls, dispensers, receptacles, and other operable equipment shall be placed within at least one of the reach ranges specified in 4.2.5 and 4.2.6. Electrical and communications system receptacles on walls shall be mounted no less than 15 in (380 mm) above the floor. Appendix Note

EXCEPTION: These requirements do not apply where the use of special equipment dictates otherwise or where electrical and communications systems receptacles are not normally intended for use by building occupants.

4.27.4 Operation. Controls and operating mechanisms shall be operable with one hand and shall not require tight grasping, pinching, or twisting of the wrist. The force required to activate controls shall be no greater than 5 lbf (22.2 N).

---

[i] Where railings, guards or handrails are provided, edge protection must be provided and extended a minimum of 2 inches above the ground or deck surface. Edge protection is not required where a railing, guardrail or handrail is provided, if the deck surface extends a minimum of 12 inches beyond the inside face of the railing.

[ii] At least one clear floor or ground space (30 inches by 48 inches) must be provided at each location that has a railing height of 34 inches maximum. If there is no railing, at least one clear space must be provided on a pier or platform.

[iii] Fishing piers and platforms must have at least one turning area, either 60-inch turning space or a T-shaped space to allow a person using a mobility device or wheelchair to make a 180-degree turn.

[iv] Gangways are not required to have to have landings at the end, if transition plates are provided. If the slope of the transition plate is greater that 1: 20 (5%), the transition plates must have a landing at the end of the transition plate not connected to the gangway and must comply with other ramp requirements.

ADA Compliance Program

MEDFORD PARKS AND RECREATION DEPARTMENT

ADA ACCESSIBILITY SURVEY FOR PARK FACILITIES

Date: March 4, 2016 **Estimated Cost:**

Facility: Bear Creek Park **Department Notified:**

Survey by: Jean Akers **Date of Notification:**

Check all applicable building codes and ADAAG publications prior to any renovation or construction. This survey is only a guideline.

ITEM				RECOMMENDATIONS
Accessible Routes[1]	**n/a**	**Yes**	**No**	**Accessible Routes**
☐ Check here if section does not apply to this park and move to next section.				
1. Does the park have accessible routes to all accessible facilities within the park?	☐	☐	☒	☐ Expand existing accessible routes as needed ☐ Construct accessible routes ☒ Note: **Slopes exceed 5% in places**
2. Where court sports are provided (i.e. tennis, basketball, and volleyball) are there accessible routes to each court? (Routes must connect both sides of the court)	☐	☐	☒	☐ Expand existing accessible routes as needed ☐ Construct accessible routes ☒ Note: **Slopes = 8.9-14.3%**
3. Are there accessible routes to any and all animal containment areas?	☐	☐	☒	☐ Expand existing accessible routes as needed ☐ Construct accessible routes ☒ Note: **Access gate issues**
4. Are there detectable warnings anywhere a route crosses a traffic way?	☐	☐	☒	☐ Repair as needed ☐ Note:
ITEM				**RECOMMENDATIONS**
Parking and Drop-off Areas	**n/a**	**Yes**	**No**	**Parking and Drop-off Areas**
☐ Check here if section does not apply to this park and move to next section.				
5. Are an adequate number of accessible parking spaces available? The table below gives the ADAAG requirement for new construction and alterations (for lots with more than 100 spaces refer to ADAAG). Accessible Spaces per Overall spaces	☐	☐	☒	☐ Reconfigure a reasonable number of spaces by repainting stripes. ☐ Construct accessible routes ☐ Note:

Total Spaces	Accessible Spaces Required
60 spaces	**2 spaces**
1 to 25	1 space
26 to 50	2 spaces
51 to 75	3 spaces
76 to 100	4 spaces

[1] Accessible routes must comply with ADAAG provisions for the location, width (minimum 36 inches) passing space, head room, surface, slope (Maximum 1:12 (or 8.33%). Accessible routes must connect all accessible elements within the facility. Accessible routes must be stable, firm and slip resistant. There is no requirement to change the surface of a playing field to an accessible surface.

6. Are an adequate number of van accessible spaces provided? At least 1 of every 8 accessible spaces must be van-accessible (with a minimum of 1 van-accessible space in all cases.)	☐	☒	☐	☐ Reconfigure to provide van-accessible space(s).
7. Are the access aisles part of the accessible route?	☐	☒	☐	☐ Add curb ramps. ☐ Reconstruct sidewalk
8. Are the accessible spaces closest to the accessible entrance?	☐	☐	☒	☐ Reconfigure spaces.
9. Are accessible spaces marked with and International Symbol of Accessibility? Are there signs reading "Van Accessible" at van spaces?	☐	☐	☒	☐ Add signs, placed so that they are not obstructed by cars.
10. Is there an enforcement procedure to ensure that accessible parking is used only by those who need it?	☐	☒	☐	☐ Implement a policy to check periodically for violators and report them to the proper authorities.
Team Player Seating Areas	**n/a**	**Yes**	**No**	**Team Player Seating Areas**
☐ Check here if section does not apply to this park and move to next section.				
11. Do fixed team or player seating areas contain the required number of wheelchair spaces and companion seats required by ADAAG?	☐	☒	☐	☐ Renovate as needed ☐ Install accessible seating area ☐ Note
Restrooms	**n/a**	**Yes**	**No**	**Restrooms**
☐ Check here if section does not apply to this park and move to next section.				
12. If rest rooms are available to the public, is at least one rest room (either one for each sex, or unisex) fully accessible?	☐	☒	☐	☐ Reconfigure rest room. ☐ Combine rest rooms to create one unisex accessible rest room. ☐ Note:
13. Are there signs at inaccessible rest rooms that give directions to accessible ones?	☒	☐	☐	☐ Install accessible signs. ☐ Note:
14. Is there tactile signage identifying rest rooms? *Note: Mount signs on the wall, on the latch side of the door, complying with the permanent signage.*	☐	☒	☐	☐ Add accessible signage, placed to the side of the door, 60 inches to centerline (not on the door itself). ☐ If symbols are used, add supplementary verbal signage. ☐ Note:
15. Are pictograms or symbols used to identify rest rooms, and, if used, are raised characters and braille included below?	☐	☒	☐	☐ If symbols are used, add supplementary verbal signage with raised characters and braille below pictogram symbol. ☐ Note:
16. Is the doorway at least 32 inches clear?	☐	☒	☐	☐ Install offset (swing-clear) hinges. ☐ Widen the doorway. ☐ Note:
17. Are doors equipped with accessible handles (operable with a closed fist), 48 inches high or less?	☐	☒	☐	☐ Lower handles. ☐ Replace knobs or latches with lever or loop handles. ☐ Add lever extensions. ☐ Install power-assisted or automatic door openers. ☐ Note:

18. Can doors be opened easily (5 lbf maximum force)?	☐	☒	☐	☐ Adjust or replace closers. ☐ Install lighter doors. ☐ Install power-assisted or automatic door openers. ☐ Note:
19. Does the entry configuration provide adequate maneuvering space for a person using a wheelchair? *Note: A person using a wheelchair needs 36 inches of clear width for forward movement, and a 5-foot diameter clear space or a T-shaped space to make turns. A minimum distance of 48 inches clear of the door swing is needed between the two doors of an entry vestibule.*	☐	☒	☐	☐ Rearrange furnishings such as chairs and trash cans. ☐ Remove inner door if there is a vestibule with two doors. ☐ Move or remove obstructing partitions. ☐ Note:
20. Is there a 36-inch-wide path to all fixtures?	☐	☐	☐	☐ Remove obstructions. ☐ Note:
21. Is the stall door operable with a closed fist, inside and out?	☐	☐	☐	☐ Replace inaccessible knobs with lever or loop handles. ☐ Add lever extensions. ☐ Note:
22. Is there a wheelchair-accessible stall that has an area of at least 5 feet by 5 feet, clear of the door swing, OR is there a stall that is less accessible but that provides greater access than a typical stall (either 36 by 69 inches or 48 by 69 inches)?	☐	☐	☐	☐ Move or remove partitions. ☐ Reverse the door swing if it is safe to do so. ☐ Note:
23. In the accessible stall, are there grab bars behind and on the side wall nearest to the toilet?	☐	☐	☐	☐ Add grab bars. ☐ Note:
24. Is the toilet seat 17 to 19 inches high?	☐	☐	☐	☐ Add raised seat. ☐ Note:
25. Does one lavatory have a 30-inch-wide by 48-inch-deep clear space in front? *Note: A maximum of 19 inches of the required depth may be under the lavatory.*	☐	☐	☐	☐ Rearrange furnishings. ☐ Replace lavatory. ☐ Remove or alter cabinetry to provide space underneath. Make sure hot pipes are covered. ☐ Move a partition or wall. ☐ Note:
26. Is the lavatory rim no higher than 34 inches?	☐	☐	☐	☐ Adjust or replace lavatory. ☐ Note:
27. Is there at least 29 inches from the floor to the bottom of the lavatory apron? (Excluding pipes)?	☐	☐	☐	☐ Adjust or replace lavatory. ☐ Note:
28. Can the faucet be operated with one closed fist?	☐	☐	☐	☐ Replace faucet handles with paddle type. ☐ Note:
29. Are soap and other dispensers and hand dryers within reach ranges (see page 7) and usable with one closed fist?	☐	☐	☐	☐ Lower dispensers. ☐ Replace with or provide additional accessible dispensers. ☐ Note:
30. Is the mirror mounted with the bottom edge of the reflecting surface 40 inches high or lower?	☐	☐	☐	☐ Lower or tilt down the mirror. ☐ Add a larger mirror anywhere in the room. ☐ Note:
Pit Toilets	**n/a**	**Yes**	**No**	**Pit Toilets**
31.				

☒ Check here if section does not apply to this park and move to next section.				
32. Is there a clear space of 60 inches by 60 inches adjacent to the toilet?	☐	☐	☐	☐ Repair as needed ☐ Note:
33. Does the height of the pit toilet riser comply with ADAAG 4.16.3?	☐	☐	☐	☐ Repair as needed ☐ Note:
34. Is the maneuvering space less than or equal to 1:50? (1:33 maximum allowed for drainage)	☐	☐	☐	☐ Repair as needed ☐ Note:
35. If the pit toilet has walls, are grab bars installed consistent with ADAAG 4.16.4?	☐	☐	☐	☐ Repair as needed ☐ Note:
36. Is the surface adjacent to the pit toilet firm and stable?	☐	☐	☐	☐ Repair as needed ☐ Note:
Utilities	**n/a**	**Yes**	**No**	**Utilities**
☒ Check here if section does not apply to this park and move to next section.				
37. Is the maneuvering space less than or equal to 1:50? (1:33 maximum allowed for drainage)	☐	☐	☐	☐ Repair as needed ☐ Note:
38. Is the surface adjacent to the utility firm and stable?	☐	☐	☐	☐ Repair as needed ☐ Note:
39. Are fixed water spouts located 28 inches minimum to 36 inches maximum above the ground or floor space?	☐	☐	☐	☐ Repair as needed ☐ Note:
40. Is the maneuvering space less than or equal to 1:50? (1:33 maximum allowed for drainage)	☐	☐	☐	☐ Repair as needed ☐ Note:
Drinking Fountains	**n/a**	**Yes**	**No**	**Drinking Fountains**
☐ Check here if section does not apply to this park and move to next section.				
41. Is there at least one fountain with clear floor space of at least 30 by 48 inches in front?	☐	☒	☐	☐ Clear more room by rearranging or removing furnishings. ☐ Note: **Not all fountains are ADA**
42. Is there one fountain with its spout no higher than 36 inches from the ground, and another with a standard height spout (or a single "hi-lo" fountain)?	☐	☒	☐	☐ Provide cup dispensers for fountains with spouts that are too high. ☐ Provide accessible water cooler. ☐ Note: **At picnic shelter**
43. Are controls mounted on the front or on the side near the front edge, and operable with one closed fist?	☐	☐	☒	☐ Replace the controls. ☐ Note: **36.5"**
44. Is each water fountain cane-detectable (located within 27 inches off the floor or protruding less than 4 inches from the wall, into the circulation path?	☐	☐	☒	☐ Place a planter or other cane-detectable barrier on each side at floor level. ☐ Note: **28" clearance**
Telephones	**n/a**	**Yes**	**No**	**Telephones**
☒ Check here if section does not apply to this park and move to next section.				
45. If pay or public use phones are provided, is there clear floor space of at least 30 by 48 inches in front of at least one?	☐	☐	☐	☐ Move furnishings. ☐ Replace booth with open station. ☐ Note:
46. Is the highest operable part of the phone no higher than 48 inches (up to 54 inches if a side approach is possible)?	☐	☐	☐	☐ Lower telephone. ☐ Note:
47. Does the phone protrude no more than 4 inches into the circulation space?	☐	☐	☐	☐ Place a cane-detectable barrier on each side at floor level. ☐ Note:

48. Does the phone have push-button controls?	☐	☐	☐	☐ Contact phone company to install push-buttons. ☐ Note:
49. Is the phone hearing-aid compatible?	☐	☐	☐	☐ Contact phone company to replace with hearing-aid compatible phone. ☐ Note:
50. Is the phone adapted with volume control?	☐	☐	☐	☐ Contact the phone company to add volume control. ☐ Note:
51. Is the phone with volume control identified with appropriate signage?	☐	☐	☐	☐ Add signage. ☐ Note:
52. If there are four or more public phones in the building, is one of the phones equipped with a text telephone (TT or TDD)?	☐	☐	☐	☐ Install a text telephone. ☐ Have a portable text telephone available. ☐ Provide a shelf and outlet next to phone. ☐ Note:
53. Is the location of the text telephone identified by accessible signage bearing the International TDD Symbol?	☐	☐	☐	☐ Add signage. ☐ Note:

Directional and Informational Signage	**n/a**	**Yes**	**No**	**Directional and Informational Signage**
☐ Check here if section does not apply to this park and move to next section.				
54. If mounted about 80 inches, do they have letters at least 3 inches high, with high contrast, and non-glare finish?	☐	☐	☒	☒ Review requirements and replace signs as needed, meeting the requirements for character size, contrast, and finish. ☐ Note:
55. Do directional and informational signs comply with legibility requirements? 56. (Building directories or temporary signs need not comply.)	☐	☐	☒	☒ Review requirements and replace signs as needed, meeting the requirements for character size, contrast, and finish. ☐ Note:

Seats, Tables and Counters	**n/a**	**Yes**	**No**	**Seats, Tables and Counters**
☐ Check here if section does not apply to this park and move to next section.				
50. Are the spaces for wheelchair seating distributed throughout? (Cover or uncovered gathering areas, bleachers)	☐	☐	☒	☐ Rearrange tables to allow room for wheelchairs in seating areas throughout the area. ☐ Remove some fixed seating. ☒ Note: **Only the 4 tables at picnic area have W/C spaces**
51. If picnic tables are provided, are at least 50% and no less than two of the tables, accessible?	☐	☐	☒	☐ Replace as needed ☐ Note:
52. Are knee spaces at accessible picnic tables at least 27 inches high, 30 inches wide, and 19 inches deep?	☐	☐	☒	☐ Replace or raise tables. ☐ Note:
53. Are picnic tables spaced such that all areas of the table are accessible?	☐	☐	☒	☐ Rearrange tables to allow room for wheelchairs in seating areas throughout the area. ☐ Remove some fixed seating. ☐ Note:
54. At each type of cashier counter, is there a portion of the main counter that is no more than 36 inches high?	☒	☐	☐	☐ Provide a lower auxiliary counter or folding shelf. ☐ Arrange the counter and surrounding furnishings to create a space to hand

				items back and forth. ☐ Note:
55. Is there a portion of food-ordering counters that is no more than 36 inches high, or is there space at the side for passing items to customers who have difficulty reaching over a high counter?	☒	☐	☐	☐ Lower section of counter. ☐ Arrange the counter and surrounding furnishings to create a space to pass items. ☐ Note:
Fire Rings	**n/a**	**Yes**	**No**	**Fire Rings**
☒ Check here if section does not apply to this park and move to next section.				
56. Do all fire rings have a clear space extending a minimum 48" deep by 48" wide at all usable portions of the ring?	☐	☐	☐	☐ Install clear spaces as needed ☐ Note:
57. Are the clear spaces around the fire pit on a firm and stable surface?	☐	☐	☐	☐ Correct as needed ☐ Note:
58. Is the fire surface height a minimum of 9" above the ground/floor?	☐	☐	☐	☐ Construct or renovate pits to meet clearances ☐ Note:
59. Are the slopes around fire pits not more than 1:50?	☐	☐	☐	☐ Construct or renovate pits to meet clearances ☐ Note:
Cooking Surfaces, Grills, Pedestal Grills[2]	**n/a**	**Yes**	**No**	**Cooking Surfaces, Grills, Pedestal Grills**
☐ Check here if section does not apply to this park and move to next section.				
60. Are accessible cooking features dispersed throughout the area and among the types provided?	☐	☐	☒	☐ Evenly disperse cooking features ☐ Note:
61. Are accessible cooking feature surfaces installed between 15 inches and 34 inches above the ground/floor?	☐	☐	☒	☐ Install as required ☐ Note:
62. Do operating controls and mechanisms comply with current ADAAG 4.27.1 (General) 4.27.2 (Clear Floor Space and 4.27.3 (Height)?	☒	☐	☐	☐ Install as required ☒ Note: **>34" height**
Fixed Trash/Recycling Containers	**n/a**	**Yes**	**No**	**Fixed Trash/Recycling Containers**
☒ Check here if section does not apply to this park and move to next section.				
63. Are trash and recycling containers accessible and do they comply with ADAAG 4.27?	☐	☐	☐	☐ Replace as needed ☐ Note:
Overlooks/Viewing Areas	**n/a**	**Yes**	**No**	**Overlooks/Viewing Areas**
☒ Check here if section does not apply to this park and move to next section.				
64. Are all viewing areas on an accessible route?	☐	☐	☐	☐ Install accessible paths as needed ☐ Note:
65. Are all viewing areas constructed to provide an unobstructed view?	☐	☐	☐	☐ Repair as needed ☐ Note:
66. Is there at least one maneuvering space that complies with ADAAG 4.2.3?	☐	☐	☐	☐ Repair as needed ☐ Note:
67. Is the ground surface firm and stable?	☐	☐	☐	☐ Repair as needed ☐ Note:

[2] Where there is only one cooking surface, grill or pedestal grill in a provided picnic area, it shall be accessible. Where multiple cooking features are provided in a picnic area, 50 percent, but no less than 2 shall be accessible.

68. Is the maneuvering space less than or equal to 1:50? (1:33 maximum allowed for drainage)	☐	☐	☐	☐ Repair as needed ☐ Note:
Telescopes/Periscopes	**n/a**	**Yes**	**No**	**Telescopes/Periscopes**
☒ Check here if section does not apply to this park and move to next section.				
69. Are at least 20%, but not less than one, telescope or periscope that complies with ADAAG 4.27?	☐	☐	☐	☐ Repair as needed ☐ Note:
70. Are the eye pieces usable from a seated position?	☐	☐	☐	☐ Repair as needed ☐ Note:
71. Is the ground surface firm and stable?	☐	☐	☐	☐ Repair as needed ☐ Note:
72. Is the maneuvering space less than or equal to 1:50? (1:33 maximum allowed for drainage)	☐	☐	☐	☐ Repair as needed ☐ Note:
Benches	**n/a**	**Yes**	**No**	**Benches**
☐ Check here if section does not apply to this park and move to next section.				
73. Where multiple benches are provided, are at least 50% consistent with this section?	☐	☐	☒	☐ Repair as needed ☐ Note:
74. Are accessible benches dispersed evenly throughout the park?	☐	☐	☒	☐ Disperse benches evenly throughout the park ☐ Note: just at play area
75. Of the accessible benches that are provided, do at least 50% of those benches have armrests consistent with ADAAG 4.26.3?	☐	☐	☒	☐ Repair as needed ☐ Note:
76. Are the front edges of accessible benches between 17 and 19 inches maximum above the ground/floor?	☐	☐	☒	☐ Repair as needed ☐ Note:
77. Are floor spaces adjacent to benches consistent with ADAAG 4.2.4?	☐	☐	☒	☐ Repair as needed ☐ Note:
78. Is the ground/floor surface around the accessible benches firm and stable?	☐	☐	☒	☐ Repair as needed ☐ Note:
79. Do all accessible benches have back support the full length of the bench?	☒	☐	☐	☐ Repair as needed ☐ Note:
Playground Equipment Accessibility	**n/a**	**Yes**	**No**	**Playground Equipment Accessibility**
☐ Check here if section does not apply to this park and move to next section.				
80. Is there at least one of each play component on an accessible route[3]?	☐	☐	☒	☐ Expand existing accessible routes as needed ☐ Construct accessible routes ☐ Note: **pebble surface=unstable**
81. Is there at least one of each ground-level play component on an accessible route?	☐	☐	☒	☐ Expand existing accessible routes as needed ☐ Construct accessible routes ☐ Note:
82. Are the play components integrated for use by all children; including those with disabilities?	☐	☐	☒	☐ Ensure play components on accessible routes can be used by all children ☐ Note:

[3] Different types of play components are based on the general experience provided by the play component. Different types include, but are no limited to, rocking, swinging, climbing, spinning and sliding. Components may be elevated or at or below ground level.

Trails	n/a	Yes	No	Trails
☐ Check here if section does not apply to this park and move to next section.				
83. Is the clear width of the trail 36 inches?	☐	☒	☐	☐ Renovate as required ☐ Construct all new trails to code ☐ Note:
84. Are openings in the trail less than ½ inch? *Note: (Board slat spaces, etc. – Elongated openings should be placed so that the long dimension is perpendicular or diagonal to the dominate direction of travel.)*	☐	☐	☒	☐ Renovate as required ☐ Construct all new trails to code ☐ Note:
85. Is the trail free of constructed or natural barriers?	☐	☒	☐	☐ Remove as needed ☐ Note:
86. Are all overhead hazards maintained at a height that is sufficient for all expected users of the trail? (Remember, Objects that protrude into a pathway at a height greater than 27" are difficult for the blind or persons with visual disabilities who use canes to detect.)	☐	☒	☐	☐ Renovate as required ☐ Construct all new trails to code ☐ Note:
87. Is there a segment in the trail that has a 10% grade for more than 30 feet?	☐	☐	☒	☐ Construct level rest interval[4] ☐ Note:
88. Are all cross slopes a maximum of 3%?	☐	☐	☒	☐ Renovate as required ☐ Construct all new trails to code ☐ Note:
89. Are all tread obstacles a maximum of 1"?	☐	☒	☐	☐ Renovate as required ☐ Construct all new trails to code ☐ Note:
90. Are passing spaces (6" x 60") provided at maximum intervals of 200 ft. whenever the clear tread width is less then 60"?	☒	☐	☐	☐ Renovate as required ☐ Construct all new trails to code ☐ Note:
91. Does the trail have or require edge protection?	☐	☐	☒	☐ Renovate as required – Where provided, edge protection should be a minimum of 3". ☐ Construct all new trails to code ☐ Note:
92. Does the trail have signs that clearly indicate the type of use, rules and difficult conditions for the trail?	☐	☐	☒	☐ Renovate as required ☐ Construct all new trails to code ☐ Note:
93. Are there signs that warn users that changes in trail level or tread obstacles could not be removed?	☐	☐	☒	☐ Renovate as required ☐ Construct all new trails to code ☐ Note:
94. Are there detectable warnings anywhere a route crosses a traffic way?	☐	☐	☒	☐ Repair as needed ☐ Note:
Shooting Facilities	**n/a**	**Yes**	**No**	**Shooting Facilities**
☒ Check here if section does not apply to this park and move to next section.				
95. Does the English Pit range have 60-inch diameter space with slopes not steeper than 1:48 so a wheelchair can turn around?	☐	☐	☐	☐ Renovate as needed ☐ Install accessible seating area ☐ Note

[4] Resting intervals must be 60" minimum on length and at least as wide as the widest portion of the trail segment leading to the resting interval with a cross slope that does not exceed 3%.

96. Do the firing benches have a wheelchair accessible area with a bench between 27 and 34 inches with a minimum of 19" leg space?	☐	☐	☐	☐ Renovate as needed ☐ Install accessible seating area ☐ Note
97. If fixed firing positions are provided, at least 5% but not less than one of each type of firing position, must be served by an accessible route. Does English Pit have an accessible route?	☐	☐	☐	☐ Renovate as needed ☐ Install accessible route ☐ Note
98. Does the park have accessible routes to all target impact areas?	☐	☐	☐	☐ Expand existing accessible routes as needed ☐ Construct accessible routes ☐ Note:
Aquatic Recreation Facilities	**n/a**	**Yes**	**No**	**Aquatic Recreation Facilities**
☒ Check here if section does not apply to this park and move to next section.				
99. Is there an accessible route (36" wide) over beach areas that allow access to the water's edge?	☐	☐	☐	☐ Renovate as needed ☐ Install accessible route ☐ Note
100. Are there accessible routes with handrails that lead into designated swim areas such as ponds, lakes, etc.	☐	☐	☐	☐ Renovate as needed ☐ Install accessible route ☐ Note
Fishing piers and Platforms	**n/a**	**Yes**	**No**	**Fishing piers and Platforms**
☒ Check here if section does not apply to this park and move to next section.				
101. Does this park have a facility specifically designed and constructed for fishing?	☐	☐	☐	(Structures that were not built specifically for fishing do not need to meet ADAAG guidelines. Structures designed as fishing piers or platforms, must have an accessible route.)
102. Does the park have a gangway serving the fishing pier or platform?	☐	☐	☐	☐ Install a gangway platform – Gangway 1:12 maximum slope or at least 30 feet long. ☐ Renovate existing platform to meet code (Check specific building codes) ☐ Note
103. Does the gangway have a transition plate to the pier or platform that meets code?	☐	☐	☐	☐ Install a transition plate[5] ☐ Adjust existing transition plate to meet code ☐ Note
104. Does the gangway have handrails?	☐	☐	☐	☐ Install handrail to meet code ☐ Ensure existing rails meet code ☐ Note
105. Does the fishing pier or platform have railings, guards or handrails[6]?	☐	☐	☐	☐ Install as needed ☐ Renovate existing structure to meet code ☐ Note
106. Does the fishing pier or platform have edge protection[i]?	☐	☐	☐	☐ Install ☐ Renovate existing edge protection ☐ Note

[5] Gangways are not required to have to have landings at the end, if transition plates are provided. If the slope of the transition plate is greater that 1: 20 (5%), the transition plates must have a landing at the end of the transition plate not connected to the gangway and must comply with other ramp requirements.

[6] Where railings, guards or handrails are provided on a fishing pier or platform, at least 25 % of the rails must be 34 inches or less in height above the ground or dock so accommodate a person in a wheelchair. These railings must be dispersed as equally as possible to all areas of the fishing pier.

107. Does the fishing pier or platform have clear floor or ground space[ii]?	☐	☐	☐	☐ Install ☐ Renovate existing edge protection ☐ Note
108. Does the fishing pier or platform have sufficient turning space[iii]?	☐	☐	☐	☐ Install ☐ Renovate existing edge protection ☐ Note
Boating Facilities	**n/a**	**Yes**	**No**	**Boating Facilities**
☒ Check here if section does not apply to this park and move to next section.				
109. Is there an accessible route to the boating facilities?	☐	☐	☐	☐ Install ☐ Renovate existing route ☐ Note
110. Does the gangway to the dock or floating dock deigned to provide for a maximum 1:12 (8.33%) slope ? *Note: Not required to be longer than 80 feet. (Elevators may be used in lieu of gangways) In smaller facilities with less than 25 boat slips, the slope of the gangway may exceed 1:12, if the gangway is at least 30 feet long.*	☐	☐	☐	☐ Install ☐ Renovate existing route ☐ Note
111. Does the gangway have a transition plate to the pier or platform that meets code[iv]?	☐	☐	☐	☐ Install a transition plate ☐ Adjust existing transition plate to meet code ☐ Note

<table>
<tr>
<td>112. Where boat slips[7] are provided, does the number of accessible slips[8] comply with the table to the right?
Note: If boat slips at a facility are not identified or demarcated by length, each 40 feet of boat slip edge along the perimeter of a pier will be counted as one boat slip</td>
<td>☐</td>
<td>☐</td>
<td>☐</td>
<td>
<table>
<tr><th colspan="2">Number of Accessible Boat Slips Required</th></tr>
<tr><td>Total Slips in Facility</td><td>Minimum Accessible Slips</td></tr>
<tr><td>1-25</td><td>1</td></tr>
<tr><td>26-50</td><td>2</td></tr>
<tr><td>50-100</td><td>3</td></tr>
<tr><td>101-150</td><td>4</td></tr>
</table>
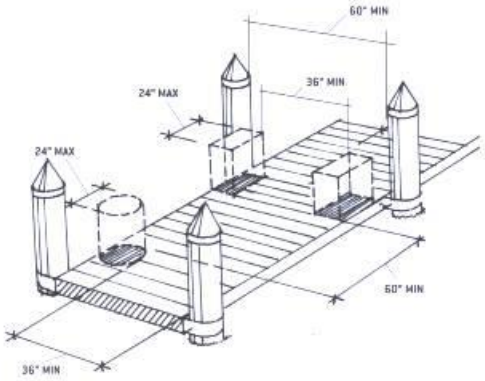

PIER CLEARANCE SPACE REDUCTION
</td>
</tr>
<tr>
<td>If the facility only has a boarding pier (see footnote # 9) at least 5% but not less than, must comply with these guidelines. The entire length of accessible boarding piers must comply with the same provisions that apply to slips.

113. Does this facility meet this regulation?</td>
<td>☐</td>
<td>☐</td>
<td>☐</td>
<td>☐ Install
☐ Renovate boarding pier
☐ Note</td>
</tr>
<tr>
<td>114. Is this facility compromised only of a boat launch with no boarding ramp or pier?</td>
<td>☐</td>
<td>☐</td>
<td>☐</td>
<td>If yes, there are no specific provisions that address access to launch ramps without boarding piers.</td>
</tr>
</table>

[7] A boat slip is the portion of a pier, main pier, finger pier, or float where a boat is berthed or moored, or used for embarking or disembarking. Boarding piers that are not part of a boat launch ramp are classified as “boat slips” for the purpose of this survey.

[8] Accessible boat slips must have clear pier space at least 60 inches wide and as long as the slip. Every 10 feet of linear pier edge serving the accessible slips must have at least one continuous clear opening that is at least 60 inches wide. The width of the clear pier space may be 36 inches wide for a length of 24 inches, as long as multiple 36-inch segments are separated by segments that are 60 inches minimum clear in width and 60 inches minimum clear in length, and the clear openings are at least 60 inches deep. Edge protection is not required

Item Number	Notes
	Cross slopes exceed 4% on path to arbor
	Path to skate park exceeds 5.5%. No accessible viewing area
	Three out of four drinking fountains are accessible
	Replace deteriorating decking on footbridge near north parking lot
	Leathers playground is surfaced with pea gravel. Unstable. Ramp provided to some platforms but no adequate transer platforms to engage play features

4.2.3* Wheelchair Turning Space. The space required for a wheelchair to make a 180-degree turn is a clear space of 60 in (1525 mm) diameter (see Fig. 3(a)) or a T-shaped space (see Fig. 3(b)). Appendix Note

4.2.4* Clear Floor or Ground Space for Wheelchairs.

4.2.4.1 Size and Approach. The minimum clear floor or ground space required to accommodate a single, stationary wheelchair and occupant is 30 in by 48 in (760 mm by 1220 mm) (see Fig. 4(a)). The minimum clear floor or ground space for wheelchairs may be positioned for forward or parallel approach to an object (see Fig. 4(b) and (c)). Clear floor or ground space for wheelchairs may be part of the knee space required under some objects.

4.2.4.2 Relationship of Maneuvering Clearance to Wheelchair Spaces. One full unobstructed side of the clear floor or ground space for a wheelchair shall adjoin or overlap an accessible route or adjoin another wheelchair clear floor space. If a clear

floor space is located in an alcove or otherwise confined on all or part of three sides, additional maneuvering clearances shall be provided as shown in Fig. 4(d) and (e).

4.2.4.3 Surfaces for Wheelchair Spaces. Clear floor or ground spaces for wheelchairs shall comply with 4.5. Appendix Note

4.16.3* Height. The height of water closets shall be 17 in to 19 in (430 mm to 485 mm), measured to the top of the toilet seat (see Fig. 29(b)). Seats shall not be sprung to return to a lifted position. Appendix Note

4.16.4* Grab Bars. Grab bars for water closets not located in stalls shall comply with 4.26 and Fig. 29. The grab bar behind the water closet shall be 36 in (915 mm) minimum. Appendix Note

4.26.3 Structural Strength. The structural strength of grab bars, tub and shower seats, fasteners, and mounting devices shall meet the following specification:

(1) Bending stress in a grab bar or seat induced by the maximum bending moment from the application of 250 lbf (1112N) shall be less than the allowable stress for the material of the grab bar or seat.

(2) Shear stress induced in a grab bar or seat by the application of 250 lbf (1112N) shall be less than the allowable shear stress for the material of the grab bar or seat. If the connection between the grab bar or seat and its mounting bracket or other support is considered to be fully restrained, then direct and torsional shear stresses shall be totaled for the combined shear stress, which shall not exceed the allowable shear stress.

(3) Shear force induced in a fastener or mounting device from the application of 250 lbf (1112N) shall be less than the allowable lateral load of either the fastener or mounting device or the supporting structure, whichever is the smaller allowable load.

(4) Tensile force induced in a fastener by a direct tension force of 250 lbf (1112N) plus the maximum moment from the application of 250 lbf (1112N) shall be less than the allowable withdrawal load between the fastener and the supporting structure.

(5) Grab bars shall not rotate within their fittings.

4.27 Controls and Operating Mechanisms.

4.27.1 General. Controls and operating mechanisms required to be accessible by 4.1 shall comply with 4.27.

4.27.2 Clear Floor Space. Clear floor space complying with 4.2.4 that allows a forward or a parallel approach by a person using a wheelchair shall be provided at controls, dispensers, receptacles, and other operable equipment.

4.27.3* Height. The highest operable part of controls, dispensers, receptacles, and other operable equipment shall be placed within at least one of the reach ranges

specified in 4.2.5 and 4.2.6. Electrical and communications system receptacles on walls shall be mounted no less than 15 in (380 mm) above the floor. Appendix Note

> EXCEPTION: These requirements do not apply where the use of special equipment dictates otherwise or where electrical and communications systems receptacles are not normally intended for use by building occupants.

4.27.4 Operation. Controls and operating mechanisms shall be operable with one hand and shall not require tight grasping, pinching, or twisting of the wrist. The force required to activate controls shall be no greater than 5 lbf (22.2 N).

---

[i] Where railings, guards or handrails are provided, edge protection must be provided and extended a minimum of 2 inches above the ground or deck surface. Edge protection is not required where a railing, guardrail or handrail is provided, if the deck surface extends a minimum of 12 inches beyond the inside face of the railing.

[ii] At least one clear floor or ground space (30 inches by 48 inches) must be provided at each location that has a railing height of 34 inches maximum. If there is no railing, at least one clear space must be provided on a pier or platform.

[iii] Fishing piers and platforms must have at least one turning area, either 60-inch turning space or a T-shaped space to allow a person using a mobility device or wheelchair to make a 180-degree turn.

[iv] Gangways are not required to have to have landings at the end, if transition plates are provided. If the slope of the transition plate is greater that 1: 20 (5%), the transition plates must have a landing at the end of the transition plate not connected to the gangway and must comply with other ramp requirements.

ADA Checklist for Existing Facilities

Priority 1 – Approach & Entrance

Based on the 2010 ADA Standards for Accessible Design

Project Medford Parks ADA Transition Plan

Building

Location Bear Creek Park

Date March 4, 2016

Surveyors Jean Akers

Contact Information

An accessible route from site arrival points and an accessible entrance should be provided for everyone.

This checklist was produced by the New England ADA Center, a project of the Institute for Human Centered Design and a member of the ADA National Network. This checklist was developed under a grant from the Department of Education, NIDRR grant number H133A060092-09A. However the contents do not necessarily represent the policy of the Department of Education, and you should not assume endorsement by the Federal Government.

Questions or comments on the checklist contact the New England ADA Center at 617-695-0085 voice/tty or ADAinfo@NewEnglandADA.org

For the full set of checklists, including the checklists for recreation facilities visit www.ADAchecklist.org.

Priority 1 – Approach & Entrance				**Comments**	**Possible Solutions**
1.1	Is there at least one route from site arrival points (parking, passenger loading zones, public sidewalks and public transportation stops) that does not require the use of stairs? [See 2010 ADA Standards for Accessible Design – 206.2.1]	☒ Yes ☐ No If yes, location of route:		Photo #:	• Add a ramp • Regrade to 1:20 maximum slope • Add a lift if site constraints prevent other solutions
Parking Accessible parking spaces should be identified by size, access aisle and signage.					
1.2	If parking is provided for the public, are an adequate number of accessible spaces provided? [208.2]	☐ Yes ☒ No Total #:3 Accessible #: 79	**Total Spaces** / **Accessible Spaces** 1 - 25 / 1 26 - 50 / 2 51 - 75 / 3 76 - 100 / 4 100+ see 2010 Standards 208.2	East Lot 2 of 60 spaces; North lot 1 of 19 spaces. The Little League fields have gravel parking area provides an undetermined number of parking Photo #:	• Reconfigure by repainting lines • •
1.3	Of the accessible spaces, is at least one a van accessible space?* [208.2.4]	☒ Yes ☐ No	*For every 6 or fraction of 6 parking spaces required by the table above, at least 1 should be a van accessible space.	Photo #:	* If constructed before 3/15/2012, parking is compliant if at least 1 in every 8 accessible spaces is van accessible • Reconfigure by repainting lines

1.4	Are accessible spaces at least 8 feet wide with an access aisle at least 5 feet wide? [502.2, 502.3] Note: Two spaces may share an access aisle. Check state/local requirements; some specify that each space have its own aisle.	☒ Yes ☐ No Measurement: East lot: 8' space/9' aisle North lot: 9.25' space/9.25' aisle	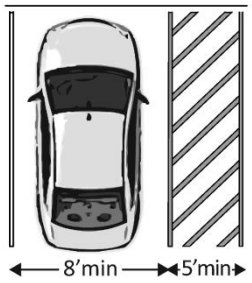	Photo #:	• Reconfigure by repainting lines • •
1.5	Is the van accessible space: At least 11 feet wide with an access aisle at least 5 feet wide? Or At least 8 feet wide with an access aisle at least 8 feet wide? [502.2]	☐ Yes ☐ No Measurement: ☒ Yes ☐ No Measurement: 9.25'/9.25'	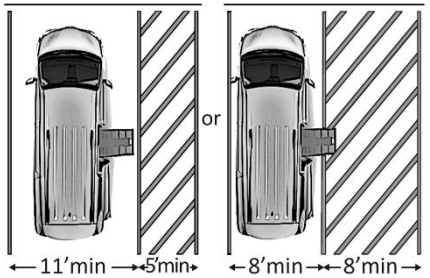	Photo #:	• Reconfigure to provide van-accessible space(s) • •
1.6	Is at least 98 inches of vertical clearance provided for the van accessible space? [502.5]	☒ Yes ☐ No Measurement:	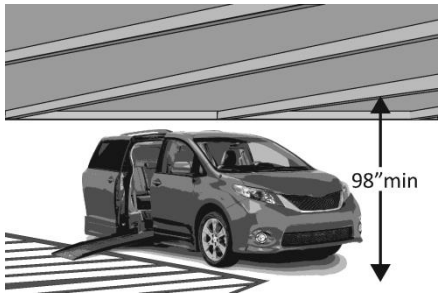	Photo #:	• Reconfigure to provide van-accessible space(s) • •

1.7	Are the access aisles marked so as to discourage parking in them? [502.3.3] Note: The marking method and color may be addressed by state/local requirements.	☒ Yes ☐ No	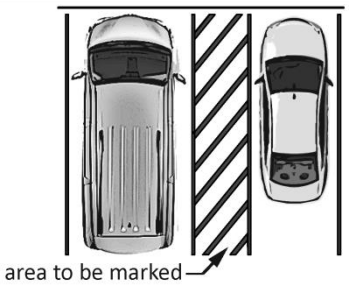	Paint is fading & needs to be restriped Photo #:	• Mark access aisles • Restriping •
1.8	Is the slope of the accessible parking spaces and access aisles no steeper than 1:48 in all directions? [502.4]	☐ Yes ☒ No Measurement: East lot: 2.5% North Lot: 4%		Photo #:	• Regrade surface • •
1.9	Do the access aisles adjoin an accessible route? [502.3]	☒ Yes ☒ No	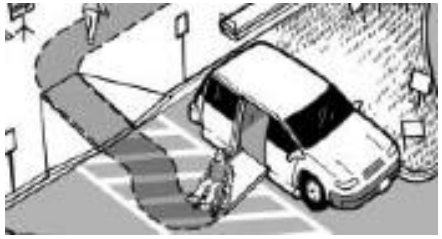	East lot complies, north lot does not comply Photo #:	• Create accessible route • Relocate accessible space •
1.10	Are accessible spaces identified with a sign that includes the International Symbol of Accessibility? Is the bottom of the sign at least 60 inches above the ground? [502.6] Note: The International Symbol of Accessibility is not required on the ground.	☒ Yes ☐ No ☐ Yes ☒ No Measurement: East lot: 41" & 44"; North lot: 35"	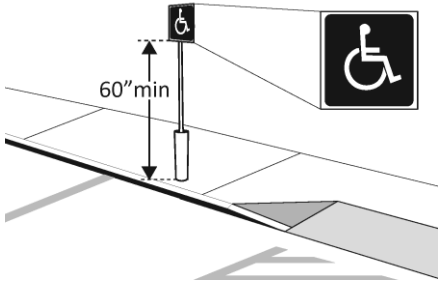	Photo #:	• Install signs • Reinstall signs at required height •

1.11	Are there signs reading "van accessible" at van accessible spaces? [502.6]	☐ Yes ☒ No		Photo #:	• Install signs • •
1.12	Of the total parking spaces, are the accessible spaces located on the closest accessible route to the accessible entrance(s)? [208.3.1] Note: If parking serves multiple entrances, accessible parking should be dispersed.	☐ Yes ☒ No		East lot is close to amphitheater but not to other park amenities (restrooms, tennis, skate park, gardens, etc). North lot access aisle is not connected to curb ramp. Photo #:	• Reconfigure spaces • •
Exterior Accessible Route					
1.13	Is the route stable, firm and slip-resistant? [302.1]	☒ Yes ☐ No		Photo #:	• Repair uneven paving • Fill small bumps and breaks with patches • Replace gravel with asphalt or other surface

1.14	Is the route at least 36 inches wide? [403.5.1] Note: The accessible route can narrow to 32 inches min. for a max. of 24 inches. These narrower portions of the route must be at least 48 inches from each other.	☒ Yes ☐ No Measurement:	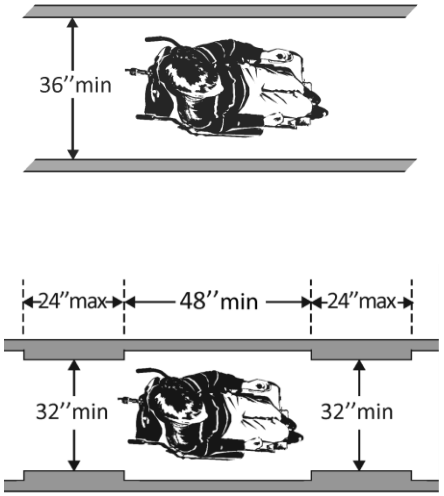	Photo #:	• Change or move landscaping, furnishings or other items • Widen route •
1.15	If the route is greater than 200 feet in length and less than 60 inches wide, is there a passing space no less than 60 x 60 inches? [403.5.3]	☐ Yes ☐ No Measurement:	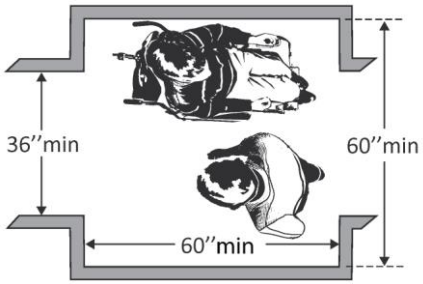	Photo #:	• Widen route for passing space • •

ADA Compliance Program

MEDFORD PARKS AND RECREATION DEPARTMENT

ADA ACCESSIBILITY SURVEY FOR PARK FACILITIES

Date: March 2, 2016 **Estimated Cost:**

Facility: Donahue-Frohmayer Park **Department Notified:**

Survey by: Jean Akers **Date of Notification:**

Check all applicable building codes and ADAAG publications prior to any renovation or construction. This survey is only a guideline.

ITEM				RECOMMENDATIONS
Accessible Routes[1]	**n/a**	**Yes**	**No**	**Accessible Routes**
☐ Check here if section does not apply to this park and move to next section.				
1. Does the park have accessible routes to all accessible facilities within the park?	☐	☐	☒	☐ Expand existing accessible routes as needed ☐ Construct accessible routes ☐ Note:
2. Where court sports are provided (i.e. tennis, basketball, and volleyball) are there accessible routes to each court? (Routes must connect both sides of the court)	☐	☐	☒	☐ Expand existing accessible routes as needed ☐ Construct accessible routes ☐ Note:
3. Are there accessible routes to any and all animal containment areas?	☒	☐	☐	☐ Expand existing accessible routes as needed ☐ Construct accessible routes ☐ Note:
4. Are there detectable warnings anywhere a route crosses a traffic way?	☐	☐	☒	☐ Repair as needed ☐ Note:
ITEM				**RECOMMENDATIONS**
Parking and Drop-off Areas	**n/a**	**Yes**	**No**	**Parking and Drop-off Areas**
☐ Check here if section does not apply to this park and move to next section.				
5. Are an adequate number of accessible parking spaces available? The table below gives the ADAAG requirement for new construction and alterations (for lots with more than 100 spaces refer to ADAAG). Accessible Spaces per Overall spaces	☐	☒	☐	☐ Reconfigure a reasonable number of spaces by repainting stripes. ☐ Construct accessible routes ☐ Note:

Total Spaces	Accessible Spaces Required
1 to 25	1 space
26 to 50	2 spaces
51 to 75	3 spaces
76 to 100	4 spaces

[1] Accessible routes must comply with ADAAG provisions for the location, width (minimum 36 inches) passing space, head room, surface, slope (Maximum 1:12 (or 8.33%). Accessible routes must connect all accessible elements within the facility. Accessible routes must be stable, firm and slip resistant. There is no requirement to change the surface of a playing field to an accessible surface.

6. Are an adequate number of van accessible spaces provided? At least 1 of every 8 accessible spaces must be van-accessible (with a minimum of 1 van-accessible space in all cases.)	☐	☐	☒	☐ Reconfigure to provide van-accessible space(s).
7. Are the access aisles part of the accessible route?	☐	☒	☐	☐ Add curb ramps. ☐ Reconstruct sidewalk
8. Are the accessible spaces closest to the accessible entrance?	☐	☒	☐	☐ Reconfigure spaces.
9. Are accessible spaces marked with and International Symbol of Accessibility? Are there signs reading "Van Accessible" at van spaces?	☐	☐	☒	☒ Add signs, placed so that they are not obstructed by cars.
10. Is there an enforcement procedure to ensure that accessible parking is used only by those who need it?	☒	☐	☐	☐ Implement a policy to check periodically for violators and report them to the proper authorities.
Team Player Seating Areas	**n/a**	**Yes**	**No**	**Team Player Seating Areas**
☐ Check here if section does not apply to this park and move to next section.				
11. Do fixed team or player seating areas contain the required number of wheelchair spaces and companion seats required by ADAAG?	☐	☐	☒	☐ Renovate as needed ☐ Install accessible seating area ☐ Note
Restrooms	**n/a**	**Yes**	**No**	**Restrooms**
☐ Check here if section does not apply to this park and move to next section.				
12. If rest rooms are available to the public, is at least one rest room (either one for each sex, or unisex) fully accessible?	☐	☒	☐	☐ Reconfigure rest room. ☐ Combine rest rooms to create one unisex accessible rest room. ☒ Note**: Trail to restrooms = too steep**
13. Are there signs at inaccessible rest rooms that give directions to accessible ones?	☒	☐	☐	☐ Install accessible signs. ☐ Note:
14. Is there tactile signage identifying rest rooms? *Note: Mount signs on the wall, on the latch side of the door, complying with the permanent signage.*	☐	☒	☐	☐ Add accessible signage, placed to the side of the door, 60 inches to centerline (not on the door itself). ☐ If symbols are used, add supplementary verbal signage. ☐ Note:
15. Are pictograms or symbols used to identify rest rooms, and, if used, are raised characters and braille included below?	☐	☒	☐	☐ If symbols are used, add supplementary verbal signage with raised characters and braille below pictogram symbol. ☐ Note:
16. Is the doorway at least 32 inches clear?	☐	☒	☐	☐ Install offset (swing-clear) hinges. ☐ Widen the doorway. ☐ Note:
17. Are doors equipped with accessible handles (operable with a closed fist), 48 inches high or less?	☐	☒	☐	☐ Lower handles. ☐ Replace knobs or latches with lever or loop handles. ☐ Add lever extensions. ☐ Install power-assisted or automatic door openers. ☐ Note:

18. Can doors be opened easily (5 lbf maximum force)?	☐	☒	☐	☐ Adjust or replace closers. ☐ Install lighter doors. ☐ Install power-assisted or automatic door openers. ☐ Note:
19. Does the entry configuration provide adequate maneuvering space for a person using a wheelchair? *Note: A person using a wheelchair needs 36 inches of clear width for forward movement, and a 5-foot diameter clear space or a T-shaped space to make turns. A minimum distance of 48 inches clear of the door swing is needed between the two doors of an entry vestibule.*	☐	☒	☐	☐ Rearrange furnishings such as chairs and trash cans. ☐ Remove inner door if there is a vestibule with two doors. ☐ Move or remove obstructing partitions. ☐ Note:
20. Is there a 36-inch-wide path to all fixtures?	☐	☒	☐	☐ Remove obstructions. ☐ Note:
21. Is the stall door operable with a closed fist, inside and out?	☐	☐	☐	☐ Replace inaccessible knobs with lever or loop handles. ☐ Add lever extensions. ☐ Note:
22. Is there a wheelchair-accessible stall that has an area of at least 5 feet by 5 feet, clear of the door swing, OR is there a stall that is less accessible but that provides greater access than a typical stall (either 36 by 69 inches or 48 by 69 inches)?	☐	☒	☐	☐ Move or remove partitions. ☐ Reverse the door swing if it is safe to do so. ☐ Note:
23. In the accessible stall, are there grab bars behind and on the side wall nearest to the toilet?	☐	☐	☐	☐ Add grab bars. ☐ Note:
24. Is the toilet seat 17 to 19 inches high?	☐	☐	☐	☐ Add raised seat. ☐ Note:
25. Does one lavatory have a 30-inch-wide by 48-inch-deep clear space in front? *Note: A maximum of 19 inches of the required depth may be under the lavatory.*	☐	☐	☐	☐ Rearrange furnishings. ☐ Replace lavatory. ☐ Remove or alter cabinetry to provide space underneath. Make sure hot pipes are covered. ☐ Move a partition or wall. ☐ Note:
26. Is the lavatory rim no higher than 34 inches?	☐	☐	☐	☐ Adjust or replace lavatory. ☐ Note:
27. Is there at least 29 inches from the floor to the bottom of the lavatory apron? (Excluding pipes)?	☐	☐	☐	☐ Adjust or replace lavatory. ☐ Note:
28. Can the faucet be operated with one closed fist?	☐	☐	☐	☐ Replace faucet handles with paddle type. ☐ Note:
29. Are soap and other dispensers and hand dryers within reach ranges (see page 7) and usable with one closed fist?	☐	☐	☐	☐ Lower dispensers. ☐ Replace with or provide additional accessible dispensers. ☐ Note:
30. Is the mirror mounted with the bottom edge of the reflecting surface 40 inches high or lower?	☐	☐	☐	☐ Lower or tilt down the mirror. ☐ Add a larger mirror anywhere in the room. ☐ Note:
Pit Toilets	**n/a**	**Yes**	**No**	**Pit Toilets**
31.				

☒ Check here if section does not apply to this park and move to next section.				
32. Is there a clear space of 60 inches by 60 inches adjacent to the toilet?	☐	☐	☐	☐ Repair as needed ☐ Note:
33. Does the height of the pit toilet riser comply with ADAAG 4.16.3?	☐	☐	☐	☐ Repair as needed ☐ Note:
34. Is the maneuvering space less than or equal to 1:50? (1:33 maximum allowed for drainage)	☐	☐	☐	☐ Repair as needed ☐ Note:
35. If the pit toilet has walls, are grab bars installed consistent with ADAAG 4.16.4?	☐	☐	☐	☐ Repair as needed ☐ Note:
36. Is the surface adjacent to the pit toilet firm and stable?	☐	☐	☐	☐ Repair as needed ☐ Note:
Utilities	**n/a**	**Yes**	**No**	**Utilities**
☒ Check here if section does not apply to this park and move to next section.				
37. Is the maneuvering space less than or equal to 1:50? (1:33 maximum allowed for drainage)	☐	☐	☐	☐ Repair as needed ☐ Note:
38. Is the surface adjacent to the utility firm and stable?	☐	☐	☐	☐ Repair as needed ☐ Note:
39. Are fixed water spouts located 28 inches minimum to 36 inches maximum above the ground or floor space?	☐	☐	☐	☐ Repair as needed ☐ Note:
40. Is the maneuvering space less than or equal to 1:50? (1:33 maximum allowed for drainage)	☐	☐	☐	☐ Repair as needed ☐ Note:
Drinking Fountains	**n/a**	**Yes**	**No**	**Drinking Fountains**
☐ Check here if section does not apply to this park and move to next section.				
41. Is there at least one fountain with clear floor space of at least 30 by 48 inches in front?	☐	☒	☐	☐ Clear more room by rearranging or removing furnishings. ☐ Note:
42. Is there one fountain with its spout no higher than 36 inches from the ground, and another with a standard height spout (or a single "hi-lo" fountain)?	☐	☒	☐	☐ Provide cup dispensers for fountains with spouts that are too high. ☐ Provide accessible water cooler. ☐ Note:
43. Are controls mounted on the front or on the side near the front edge, and operable with one closed fist?	☐	☒	☐	☐ Replace the controls. ☐ Note:
44. Is each water fountain cane-detectable (located within 27 inches off the floor or protruding less than 4 inches from the wall, into the circulation path?	☐	☒	☐	☐ Place a planter or other cane-detectable barrier on each side at floor level. ☐ Note:
Telephones	**n/a**	**Yes**	**No**	**Telephones**
☒ Check here if section does not apply to this park and move to next section.				
45. If pay or public use phones are provided, is there clear floor space of at least 30 by 48 inches in front of at least one?	☐	☐	☐	☐ Move furnishings. ☐ Replace booth with open station. ☐ Note:
46. Is the highest operable part of the phone no higher than 48 inches (up to 54 inches if a side approach is possible)?	☐	☐	☐	☐ Lower telephone. ☐ Note:
47. Does the phone protrude no more than 4 inches into the circulation space?	☐	☐	☐	☐ Place a cane-detectable barrier on each side at floor level. ☐ Note:

48. Does the phone have push-button controls?	☐	☐	☐	☐ Contact phone company to install push-buttons. ☐ Note:
49. Is the phone hearing-aid compatible?	☐	☐	☐	☐ Contact phone company to replace with hearing-aid compatible phone. ☐ Note:
50. Is the phone adapted with volume control?	☐	☐	☐	☐ Contact the phone company to add volume control. ☐ Note:
51. Is the phone with volume control identified with appropriate signage?	☐	☐	☐	☐ Add signage. ☐ Note:
52. If there are four or more public phones in the building, is one of the phones equipped with a text telephone (TT or TDD)?	☐	☐	☐	☐ Install a text telephone. ☐ Have a portable text telephone available. ☐ Provide a shelf and outlet next to phone. ☐ Note:
53. Is the location of the text telephone identified by accessible signage bearing the International TDD Symbol?	☐	☐	☐	☐ Add signage. ☐ Note:

Directional and Informational Signage	**n/a**	**Yes**	**No**	**Directional and Informational Signage**
☐ Check here if section does not apply to this park and move to next section.				
54. If mounted about 80 inches, do they have letters at least 3 inches high, with high contrast, and non-glare finish?	☐	☐	☒	☒ Review requirements and replace signs as needed, meeting the requirements for character size, contrast, and finish. ☒ Note: **Park rules signs**
55. Do directional and informational signs comply with legibility requirements? 56. (Building directories or temporary signs need not comply.)	☐	☐	☒	☒ Review requirements and replace signs as needed, meeting the requirements for character size, contrast, and finish. ☐ Note:

Seats, Tables and Counters	**n/a**	**Yes**	**No**	**Seats, Tables and Counters**
☐ Check here if section does not apply to this park and move to next section.				
50. Are the spaces for wheelchair seating distributed throughout? (Cover or uncovered gathering areas, bleachers)	☐	☐	☒	☐ Rearrange tables to allow room for wheelchairs in seating areas throughout the area. ☐ Remove some fixed seating. ☐ Note:
51. If picnic tables are provided, are at least 50% and no less than two of the tables, accessible?	☐	☐	☒	☐ Replace as needed ☒ Note: Paved trails exceed 5% - no ramp
52. Are knee spaces at accessible picnic tables at least 27 inches high, 30 inches wide, and 19 inches deep?	☐	☒	☐	☐ Replace or raise tables. ☐ Note:
53. Are picnic tables spaced such that all areas of the table are accessible?	☐	☐	☒	☐ Rearrange tables to allow room for wheelchairs in seating areas throughout the area. ☐ Remove some fixed seating. ☐ Note:
54. At each type of cashier counter, is there a portion of the main counter that is no more than 36 inches high?	☒	☐	☐	☐ Provide a lower auxiliary counter or folding shelf. ☐ Arrange the counter and surrounding furnishings to create a space to hand items back and forth.

				☐ Note:
55. Is there a portion of food-ordering counters that is no more than 36 inches high, or is there space at the side for passing items to customers who have difficulty reaching over a high counter?	☒	☐	☐	☐ Lower section of counter. ☐ Arrange the counter and surrounding furnishings to create a space to pass items. ☐ Note:
Fire Rings	**n/a**	**Yes**	**No**	**Fire Rings**
☒ Check here if section does not apply to this park and move to next section.				
56. Do all fire rings have a clear space extending a minimum 48" deep by 48" wide at all usable portions of the ring?	☐	☐	☐	☐ Install clear spaces as needed ☐ Note:
57. Are the clear spaces around the fire pit on a firm and stable surface?	☐	☐	☐	☐ Correct as needed ☐ Note:
58. Is the fire surface height a minimum of 9" above the ground/floor?	☐	☐	☐	☐ Construct or renovate pits to meet clearances ☐ Note:
59. Are the slopes around fire pits not more than 1:50?	☐	☐	☐	☐ Construct or renovate pits to meet clearances ☐ Note:
Cooking Surfaces, Grills, Pedestal Grills[2]	**n/a**	**Yes**	**No**	**Cooking Surfaces, Grills, Pedestal Grills**
☐ Check here if section does not apply to this park and move to next section.				
60. Are accessible cooking features dispersed throughout the area and among the types provided?	☐	☐	☒	☐ Evenly disperse cooking features ☐ Note: **Grills in lawn areas**
61. Are accessible cooking feature surfaces installed between 15 inches and 34 inches above the ground/floor?	☐	☒	☐	☐ Install as required ☐ Note:
62. Do operating controls and mechanisms comply with current ADAAG 4.27.1 (General) 4.27.2 (Clear Floor Space and 4.27.3 (Height)?	☒	☐	☐	☐ Install as required ☐ Note:
Fixed Trash/Recycling Containers	**n/a**	**Yes**	**No**	**Fixed Trash/Recycling Containers**
☐ Check here if section does not apply to this park and move to next section.				
63. Are trash and recycling containers accessible and do they comply with ADAAG 4.27?	☐	☒	☐	☐ Replace as needed ☐ Note:
Overlooks/Viewing Areas	**n/a**	**Yes**	**No**	**Overlooks/Viewing Areas**
☐ Check here if section does not apply to this park and move to next section.				
64. Are all viewing areas on an accessible route?	☐	☐	☒	☐ Install accessible paths as needed ☐ Note: **Memorial garden = steep access ramps**
65. Are all viewing areas constructed to provide an unobstructed view?	☐	☐	☒	☐ Repair as needed ☐ Note:
66. Is there at least one maneuvering space that complies with ADAAG 4.2.3?	☐	☒	☐	☐ Repair as needed ☐ Note:
67. Is the ground surface firm and stable?	☐	☒	☐	☐ Repair as needed ☐ Note:

[2] Where there is only one cooking surface, grill or pedestal grill in a provided picnic area, it shall be accessible. Where multiple cooking features are provided in a picnic area, 50 percent, but no less than 2 shall be accessible.

68. Is the maneuvering space less than or equal to 1:50? (1:33 maximum allowed for drainage)	☐	☒	☐	☐ Repair as needed ☐ Note:
Telescopes/Periscopes	**n/a**	**Yes**	**No**	**Telescopes/Periscopes**
☒ Check here if section does not apply to this park and move to next section.				
69. Are at least 20%, but not less than one, telescope or periscope that complies with ADAAG 4.27?	☐	☐	☐	☐ Repair as needed ☐ Note:
70. Are the eye pieces usable from a seated position?	☐	☐	☐	☐ Repair as needed ☐ Note:
71. Is the ground surface firm and stable?	☐	☐	☐	☐ Repair as needed ☐ Note:
72. Is the maneuvering space less than or equal to 1:50? (1:33 maximum allowed for drainage)	☐	☐	☐	☐ Repair as needed ☐ Note:
Benches	**n/a**	**Yes**	**No**	**Benches**
☐ Check here if section does not apply to this park and move to next section.				
73. Where multiple benches are provided, are at least 50% consistent with this section?	☐	☐	☒	☐ Repair as needed ☐ Note: **6 benches, off trail**
74. Are accessible benches dispersed evenly throughout the park?	☐	☐	☒	☐ Disperse benches evenly throughout the park ☐ Note: just at play area
75. Of the accessible benches that are provided, do at least 50% of those benches have armrests consistent with ADAAG 4.26.3?	☐	☐	☒	☐ Repair as needed ☐ Note:
76. Are the front edges of accessible benches between 17 and 19 inches maximum above the ground/floor?	☐	☐	☒	☐ Repair as needed ☐ Note:
77. Are floor spaces adjacent to benches consistent with ADAAG 4.2.4?	☐	☐	☒	☐ Repair as needed ☐ Note:
78. Is the ground/floor surface around the accessible benches firm and stable?	☐	☐	☒	☐ Repair as needed ☐ Note:
79. Do all accessible benches have back support the full length of the bench?	☐	☒	☐	☐ Repair as needed ☐ Note:
Playground Equipment Accessibility	**n/a**	**Yes**	**No**	**Playground Equipment Accessibility**
☐ Check here if section does not apply to this park and move to next section.				
80. Is there at least one of each play component on an accessible route[3]?	☐	☐	☒	☐ Expand existing accessible routes as needed ☒ Construct accessible routes ☐ Note: **Ramps needed**
81. Is there at least one of each ground-level play component on an accessible route?	☐	☐	☒	☐ Expand existing accessible routes as needed ☒ Construct accessible routes ☐ Note:
82. Are the play components integrated for use by all children; including those with disabilities?	☐	☒	☐	☐ Ensure play components on accessible routes can be used by all children ☐ Note:

[3] Different types of play components are based on the general experience provided by the play component. Different types include, but are no limited to, rocking, swinging, climbing, spinning and sliding. Components may be elevated or at or below ground level.

Trails	n/a	Yes	No	Trails
☐ Check here if section does not apply to this park and move to next section.				
83. Is the clear width of the trail 36 inches?	☐	☒	☐	☐ Renovate as required ☐ Construct all new trails to code ☐ Note:
84. Are openings in the trail less than ½ inch? *Note: (Board slat spaces, etc. – Elongated openings should be placed so that the long dimension is perpendicular or diagonal to the dominate direction of travel.)*	☐	☐	☒	☐ Renovate as required ☐ Construct all new trails to code ☐ Note: **Cracks in asphalt; gaps in boardwalk**
85. Is the trail free of constructed or natural barriers?	☐	☒	☐	☐ Remove as needed ☐ Note:
86. Are all overhead hazards maintained at a height that is sufficient for all expected users of the trail? (Remember, Objects that protrude into a pathway at a height greater than 27" are difficult for the blind or persons with visual disabilities who use canes to detect.)	☐	☒	☐	☐ Renovate as required ☐ Construct all new trails to code ☐ Note:
87. Is there a segment in the trail that has a 10% grade for more than 30 feet?	☐	☒	☐	☒ Construct level rest interval[4] ☐ Note:
88. Are all cross slopes a maximum of 3%?	☐	☐	☒	☐ Renovate as required ☐ Construct all new trails to code ☐ Note:
89. Are all tread obstacles a maximum of 1"?	☐	☐	☒	☐ Renovate as required ☐ Construct all new trails to code ☐ Note: **Cracks & gaps**
90. Are passing spaces (6" x 60") provided at maximum intervals of 200 ft. whenever the clear tread width is less then 60"?	☒	☐	☐	☐ Renovate as required ☐ Construct all new trails to code ☐ Note:
91. Does the trail have or require edge protection?	☐	☐	☒	☐ Renovate as required – Where provided, edge protection should be a minimum of 3". ☐ Construct all new trails to code ☐ Note:
92. Does the trail have signs that clearly indicate the type of use, rules and difficult conditions for the trail?	☐	☐	☒	☐ Renovate as required ☐ Construct all new trails to code ☐ Note:
93. Are there signs that warn users that changes in trail level or tread obstacles could not be removed?	☐	☐	☒	☐ Renovate as required ☐ Construct all new trails to code ☐ Note:
94. Are there detectable warnings anywhere a route crosses a traffic way?	☐	☐	☒	☐ Repair as needed ☐ Note:
Shooting Facilities	**n/a**	**Yes**	**No**	**Shooting Facilities**
☒ Check here if section does not apply to this park and move to next section.				
95. Does the English Pit range have 60-inch diameter space with slopes not steeper than 1:48 so a wheelchair can turn around?	☐	☐	☐	☐ Renovate as needed ☐ Install accessible seating area ☐ Note

[4] Resting intervals must be 60" minimum on length and at least as wide as the widest portion of the trail segment leading to the resting interval with a cross slope that does not exceed 3%.

96. Do the firing benches have a wheelchair accessible area with a bench between 27 and 34 inches with a minimum of 19" leg space?	☐	☐	☐	☐ Renovate as needed ☐ Install accessible seating area ☐ Note
97. If fixed firing positions are provided, at least 5% but not less than one of each type of firing position, must be served by an accessible route. Does English Pit have an accessible route?	☐	☐	☐	☐ Renovate as needed ☐ Install accessible route ☐ Note
98. Does the park have accessible routes to all target impact areas?	☐	☐	☐	☐ Expand existing accessible routes as needed ☐ Construct accessible routes ☐ Note:
Aquatic Recreation Facilities	**n/a**	**Yes**	**No**	**Aquatic Recreation Facilities**
☒ Check here if section does not apply to this park and move to next section.				
99. Is there an accessible route (36" wide) over beach areas that allow access to the water's edge?	☐	☐	☐	☐ Renovate as needed ☐ Install accessible route ☐ Note
100. Are there accessible routes with handrails that lead into designated swim areas such as ponds, lakes, etc.	☐	☐	☐	☐ Renovate as needed ☐ Install accessible route ☐ Note
Fishing piers and Platforms	**n/a**	**Yes**	**No**	**Fishing piers and Platforms**
☒ Check here if section does not apply to this park and move to next section.				
101. Does this park have a facility specifically designed and constructed for fishing?	☐	☐	☐	(Structures that were not built specifically for fishing do not need to meet ADAAG guidelines. Structures designed as fishing piers or platforms, must have an accessible route.)
102. Does the park have a gangway serving the fishing pier or platform?	☐	☐	☐	☐ Install a gangway platform – Gangway 1:12 maximum slope or at least 30 feet long. ☐ Renovate existing platform to meet code (Check specific building codes) ☐ Note
103. Does the gangway have a transition plate to the pier or platform that meets code?	☐	☐	☐	☐ Install a transition plate[5] ☐ Adjust existing transition plate to meet code ☐ Note
104. Does the gangway have handrails?	☐	☐	☐	☐ Install handrail to meet code ☐ Ensure existing rails meet code ☐ Note
105. Does the fishing pier or platform have railings, guards or handrails[6]?	☐	☐	☐	☐ Install as needed ☐ Renovate existing structure to meet code ☐ Note
106. Does the fishing pier or platform have edge protection[i]?	☐	☐	☐	☐ Install ☐ Renovate existing edge protection ☐ Note

[5] Gangways are not required to have to have landings at the end, if transition plates are provided. If the slope of the transition plate is greater that 1: 20 (5%), the transition plates must have a landing at the end of the transition plate not connected to the gangway and must comply with other ramp requirements.

[6] Where railings, guards or handrails are provided on a fishing pier or platform, at least 25 % of the rails must be 34 inches or less in height above the ground or dock so accommodate a person in a wheelchair. These railings must be dispersed as equally as possible to all areas of the fishing pier.

107. Does the fishing pier or platform have clear floor or ground space[ii]?	☐	☐	☐	☐ Install ☐ Renovate existing edge protection ☐ Note
108. Does the fishing pier or platform have sufficient turning space[iii]?	☐	☐	☐	☐ Install ☐ Renovate existing edge protection ☐ Note
Boating Facilities	**n/a**	**Yes**	**No**	**Boating Facilities**
☒ Check here if section does not apply to this park and move to next section.				
109. Is there an accessible route to the boating facilities?	☐	☐	☐	☐ Install ☐ Renovate existing route ☐ Note
110. Does the gangway to the dock or floating dock deigned to provide for a maximum 1:12 (8.33%) slope ? *Note: Not required to be longer than 80 feet. (Elevators may be used in lieu of gangways) In smaller facilities with less than 25 boat slips, the slope of the gangway may exceed 1:12, if the gangway is at least 30 feet long.*	☐	☐	☐	☐ Install ☐ Renovate existing route ☐ Note
111. Does the gangway have a transition plate to the pier or platform that meets code[iv]?	☐	☐	☐	☐ Install a transition plate ☐ Adjust existing transition plate to meet code ☐ Note

<table>
<tr><td>112. Where boat slips[7] are provided, does the number of accessible slips[8] comply with the table to the right?
Note: If boat slips at a facility are not identified or demarcated by length, each 40 feet of boat slip edge along the perimeter of a pier will be counted as one boat slip</td><td>☐</td><td>☐</td><td>☐</td><td>
<table>
<tr><th colspan="2">Number of Accessible Boat Slips Required</th></tr>
<tr><td>Total Slips in Facility</td><td>Minimum Accessible Slips</td></tr>
<tr><td>1-25</td><td>1</td></tr>
<tr><td>26-50</td><td>2</td></tr>
<tr><td>50-100</td><td>3</td></tr>
<tr><td>101-150</td><td>4</td></tr>
</table>
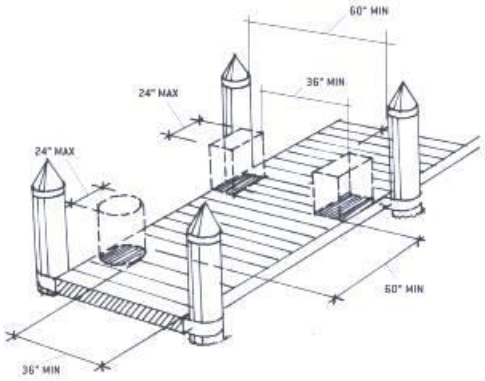

PIER CLEARANCE SPACE REDUCTION
</td></tr>
<tr><td>If the facility only has a boarding pier (see footnote # 9) at least 5% but not less than, must comply with these guidelines. The entire length of accessible boarding piers must comply with the same provisions that apply to slips.

113. Does this facility meet this regulation?</td><td>☐</td><td>☐</td><td>☐</td><td>☐ Install
☐ Renovate boarding pier
☐ Note</td></tr>
<tr><td>114. Is this facility compromised only of a boat launch with no boarding ramp or pier?</td><td>☐</td><td>☐</td><td>☐</td><td>If yes, there are no specific provisions that address access to launch ramps without boarding piers.</td></tr>
</table>

[7] A boat slip is the portion of a pier, main pier, finger pier, or float where a boat is berthed or moored, or used for embarking or disembarking. Boarding piers that are not part of a boat launch ramp are classified as “boat slips” for the purpose of this survey.

[8] Accessible boat slips must have clear pier space at least 60 inches wide and as long as the slip. Every 10 feet of linear pier edge serving the accessible slips must have at least one continuous clear opening that is at least 60 inches wide. The width of the clear pier space may be 36 inches wide for a length of 24 inches, as long as multiple 36-inch segments are separated by segments that are 60 inches minimum clear in width and 60 inches minimum clear in length, and the clear openings are at least 60 inches deep. Edge protection is not required

Item Number	Notes
	Routes to playground exceed 9% grade
	Routes to restroom exceed 13%
	Routes to baskeetball exceed 11%
	Routes to memorial garden exceed 10%
	Trail cross slopes exceed 8%

4.2.3* Wheelchair Turning Space. The space required for a wheelchair to make a 180-degree turn is a clear space of 60 in (1525 mm) diameter (see Fig. 3(a)) or a T-shaped space (see Fig. 3(b)). Appendix Note

4.2.4* Clear Floor or Ground Space for Wheelchairs.

4.2.4.1 Size and Approach. The minimum clear floor or ground space required to accommodate a single, stationary wheelchair and occupant is 30 in by 48 in (760 mm by 1220 mm) (see Fig. 4(a)). The minimum clear floor or ground space for wheelchairs may be positioned for forward or parallel approach to an object (see Fig. 4(b) and (c)). Clear floor or ground space for wheelchairs may be part of the knee space required under some objects.

4.2.4.2 Relationship of Maneuvering Clearance to Wheelchair Spaces. One full unobstructed side of the clear floor or ground space for a wheelchair shall adjoin or overlap an accessible route or adjoin another wheelchair clear floor space. If a clear floor space is located in an alcove or otherwise confined on all or part of three sides, additional maneuvering clearances shall be provided as shown in Fig. 4(d) and (e).

4.2.4.3 Surfaces for Wheelchair Spaces. Clear floor or ground spaces for wheelchairs shall comply with 4.5. Appendix Note

4.16.3* Height. The height of water closets shall be 17 in to 19 in (430 mm to 485 mm), measured to the top of the toilet seat (see Fig. 29(b)). Seats shall not be sprung to return to a lifted position. Appendix Note

4.16.4* Grab Bars. Grab bars for water closets not located in stalls shall comply with 4.26 and Fig. 29. The grab bar behind the water closet shall be 36 in (915 mm) minimum. Appendix Note

4.26.3 Structural Strength. The structural strength of grab bars, tub and shower seats, fasteners, and mounting devices shall meet the following specification:

(1) Bending stress in a grab bar or seat induced by the maximum bending moment from the application of 250 lbf (1112N) shall be less than the allowable stress for the material of the grab bar or seat.

(2) Shear stress induced in a grab bar or seat by the application of 250 lbf (1112N) shall be less than the allowable shear stress for the material of the grab bar or seat. If the connection between the grab bar or seat and its mounting bracket or other support is considered to be fully restrained, then direct and torsional shear stresses shall be totaled for the combined shear stress, which shall not exceed the allowable shear stress.

(3) Shear force induced in a fastener or mounting device from the application of 250 lbf (1112N) shall be less than the allowable lateral load of either the fastener or mounting device or the supporting structure, whichever is the smaller allowable load.

(4) Tensile force induced in a fastener by a direct tension force of 250 lbf (1112N) plus the maximum moment from the application of 250 lbf (1112N) shall be less than the allowable withdrawal load between the fastener and the supporting structure.

(5) Grab bars shall not rotate within their fittings.

4.27 Controls and Operating Mechanisms.

4.27.1 General. Controls and operating mechanisms required to be accessible by 4.1 shall comply with 4.27.

4.27.2 Clear Floor Space. Clear floor space complying with 4.2.4 that allows a forward or a parallel approach by a person using a wheelchair shall be provided at controls, dispensers, receptacles, and other operable equipment.

4.27.3* Height. The highest operable part of controls, dispensers, receptacles, and other operable equipment shall be placed within at least one of the reach ranges specified in 4.2.5 and 4.2.6. Electrical and communications system receptacles on walls shall be mounted no less than 15 in (380 mm) above the floor. Appendix Note

EXCEPTION: These requirements do not apply where the use of special equipment dictates otherwise or where electrical and communications systems receptacles are not normally intended for use by building occupants.

4.27.4 Operation. Controls and operating mechanisms shall be operable with one hand and shall not require tight grasping, pinching, or twisting of the wrist. The force required to activate controls shall be no greater than 5 lbf (22.2 N).

---

[i] Where railings, guards or handrails are provided, edge protection must be provided and extended a minimum of 2 inches above the ground or deck surface. Edge protection is not required where a railing, guardrail or handrail is provided, if the deck surface extends a minimum of 12 inches beyond the inside face of the railing.

[ii] At least one clear floor or ground space (30 inches by 48 inches) must be provided at each location that has a railing height of 34 inches maximum. If there is no railing, at least one clear space must be provided on a pier or platform.

[iii] Fishing piers and platforms must have at least one turning area, either 60-inch turning space or a T-shaped space to allow a person using a mobility device or wheelchair to make a 180-degree turn.

[iv] Gangways are not required to have to have landings at the end, if transition plates are provided. If the slope of the transition plate is greater that 1: 20 (5%), the transition plates must have a landing at the end of the transition plate not connected to the gangway and must comply with other ramp requirements.

ADA Checklist for Existing Facilities

Priority 1 – Approach & Entrance

Based on the 2010 ADA Standards for Accessible Design

Project: Medford Parks ADA Transition Plan

Building

Location: Donahue-Frohmayer Park

Date: March 2, 2016

Surveyors: Jean Akers

Contact Information

An accessible route from site arrival points and an accessible entrance should be provided for everyone.

This checklist was produced by the New England ADA Center, a project of the Institute for Human Centered Design and a member of the ADA National Network. This checklist was developed under a grant from the Department of Education, NIDRR grant number H133A060092-09A. However the contents do not necessarily represent the policy of the Department of Education, and you should not assume endorsement by the Federal Government.

Questions or comments on the checklist contact the New England ADA Center at 617-695-0085 voice/tty or ADAinfo@NewEnglandADA.org

For the full set of checklists, including the checklists for recreation facilities visit www.ADAchecklist.org.

Priority 1 – Approach & Entrance				**Comments**	**Possible Solutions**
1.1	Is there at least one route from site arrival points (parking, passenger loading zones, public sidewalks and public transportation stops) that does not require the use of stairs? [See 2010 ADA Standards for Accessible Design – 206.2.1]	☒ Yes ☐ No If yes, location of route:		Photo #:	• Add a ramp • Regrade to 1:20 maximum slope • Add a lift if site constraints prevent other solutions
Parking Accessible parking spaces should be identified by size, access aisle and signage.					
1.2	If parking is provided for the public, are an adequate number of accessible spaces provided? [208.2]	☒ Yes ☐ No Total #:45 Accessible #: 4	**Total Spaces** / **Accessible Spaces** 1 - 25 / 1 26 - 50 / 2 51 - 75 / 3 76 - 100 / 4 100+ see 2010 Standards 208.2	Photo #:	• Reconfigure by repainting lines • •
1.3	Of the accessible spaces, is at least one a van accessible space?* [208.2.4]	☐ Yes ☒ No	*For every 6 or fraction of 6 parking spaces required by the table above, at least 1 should be a van accessible space.	Photo #:	* If constructed before 3/15/2012, parking is compliant if at least 1 in every 8 accessible spaces is van accessible • Reconfigure by repainting lines

1.4	Are accessible spaces at least 8 feet wide with an access aisle at least 5 feet wide? [502.2, 502.3] Note: Two spaces may share an access aisle. Check state/local requirements; some specify that each space have its own aisle.	☒ Yes ☐ No Measurement: 8' spaces/7'aisle	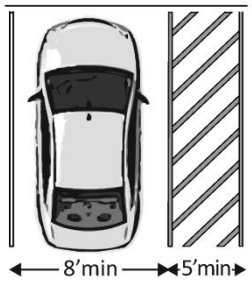	Photo #:	• Reconfigure by repainting lines • •
1.5	Is the van accessible space: At least 11 feet wide with an access aisle at least 5 feet wide? Or At least 8 feet wide with an access aisle at least 8 feet wide? [502.2]	☐ Yes ☒ No Measurement: 8'space/7'aisle ☐ Yes ☒ No Measurement: 8'space/7'aisle	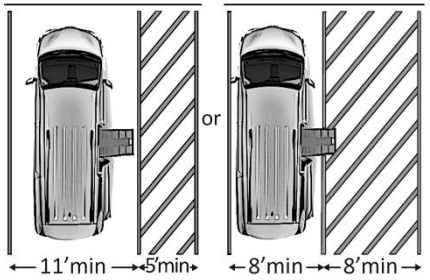	Photo #:	• Reconfigure to provide van-accessible space(s) • •
1.6	Is at least 98 inches of vertical clearance provided for the van accessible space? [502.5]	☒ Yes ☐ No Measurement:	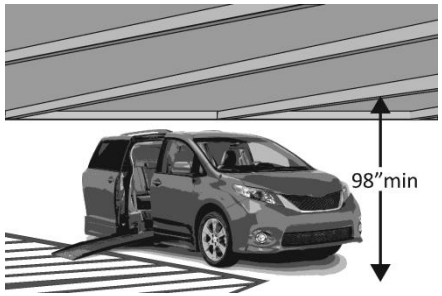	Photo #:	• Reconfigure to provide van-accessible space(s) • •

1.7	Are the access aisles marked so as to discourage parking in them? [502.3.3] Note: The marking method and color may be addressed by state/local requirements.	☒ Yes ☐ No	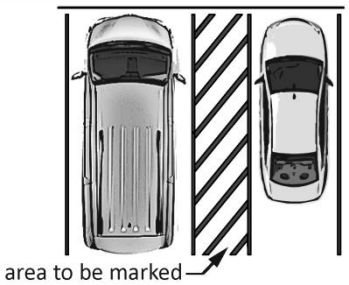	Painting is fading; needs restriping. Photo #:	• Mark access aisles • Restripe access aisles •
1.8	Is the slope of the accessible parking spaces and access aisles no steeper than 1:48 in all directions? [502.4]	☐ Yes ☒ No Measurement: East H/C spaces 2.6%/4.3%		Slopes at east H/C spaces exceed maximum. Photo #:	• Regrade surface • •
1.9	Do the access aisles adjoin an accessible route? [502.3]	☒ Yes ☐ No	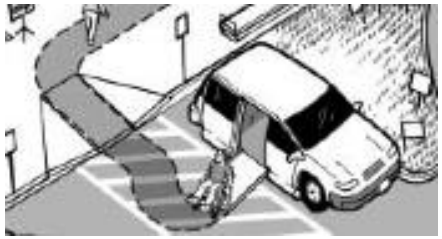	Photo #:	• Create accessible route • Relocate accessible space •
1.10	Are accessible spaces identified with a sign that includes the International Symbol of Accessibility? Is the bottom of the sign at least 60 inches above the ground? [502.6] Note: The International Symbol of Accessibility is not required on the ground.	☒ Yes ☐ No ☐ Yes ☒ No Measurement: 36” height	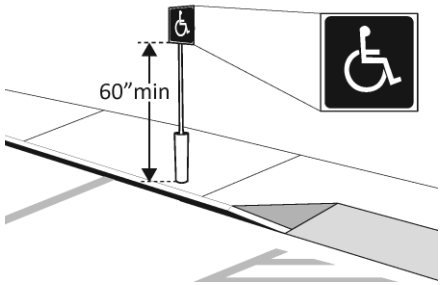	One sign is turned backwards; both signs mounted too low.	•Re-Install signs at required height. • •

				Photo #:	
1.11	Are there signs reading "van accessible" at van accessible spaces? [502.6]	☐ Yes ☒ No		Photo #:	• Install signs • •
1.12	Of the total parking spaces, are the accessible spaces located on the closest accessible route to the accessible entrance(s)? [208.3.1] Note: If parking serves multiple entrances, accessible parking should be dispersed.	☒ Yes ☐ No		Photo #:	• Reconfigure spaces • •
Exterior Accessible Route					
1.13	Is the route stable, firm and slip-resistant? [302.1]	☒ Yes ☐ No		Photo #:	• Repair uneven paving • Fill small bumps and breaks with patches • Replace gravel with asphalt or other surface

1.14	Is the route at least 36 inches wide? [403.5.1] Note: The accessible route can narrow to 32 inches min. for a max. of 24 inches. These narrower portions of the route must be at least 48 inches from each other.	☒ Yes ☐ No Measurement:	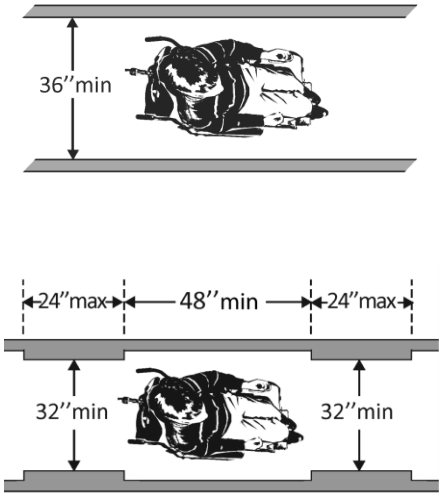	Photo #:	• Change or move landscaping, furnishings or other items • Widen route •
1.15	If the route is greater than 200 feet in length and less than 60 inches wide, is there a passing space no less than 60 x 60 inches? [403.5.3]	☒ Yes ☐ No Measurement:	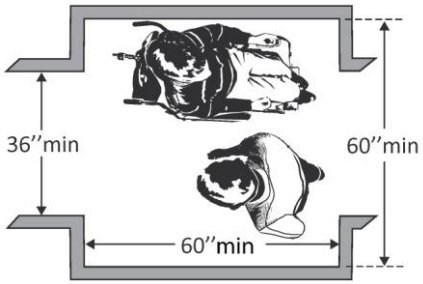	Photo #:	• Widen route for passing space • •
1.16	If there are grates or openings on the route, are the openings no larger than ½ inches? Is the long dimension perpendicular to the dominant direction of travel? [302.3]	☐ Yes ☐ No Measurement: ☐ Yes ☐ No	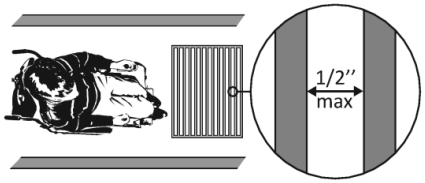		• Replace or move grate • •

			Photo #:	

Access routes from parking to playground have 9% slopes. Paved paths to memorial garden have 11.4% slopes.

Cross slopes of curb ramp are 3.5%. Running slope of curb ramp is 9.3% slope.

ADA Compliance Program

MEDFORD PARKS AND RECREATION DEPARTMENT

ADA ACCESSIBILITY SURVEY FOR PARK FACILITIES

Date: **March 4, 2016** **Estimated Cost:**

Facility: **Earhart Park** **Department Notified:**

Survey by: **Jean Akers** **Date of Notification:**

Check all applicable building codes and ADAAG publications prior to any renovation or construction. This survey is only a guideline.

ITEM				RECOMMENDATIONS
Accessible Routes[1]	**n/a**	**Yes**	**No**	**Accessible Routes**
☐ Check here if section does not apply to this park and move to next section.				
1. Does the park have accessible routes to all accessible facilities within the park?	☒	☐	☐	☐ Expand existing accessible routes as needed ☐ Construct accessible routes ☐ Note: **No accessible facilities**
2. Where court sports are provided (i.e. tennis, basketball, and volleyball) are there accessible routes to each court? (Routes must connect both sides of the court)	☒	☐	☐	☐ Expand existing accessible routes as needed ☐ Construct accessible routes ☐ Note:
3. Are there accessible routes to any and all animal containment areas?	☒	☐	☐	☐ Expand existing accessible routes as needed ☐ Construct accessible routes ☐ Note:
4. Are there detectable warnings anywhere a route crosses a traffic way?	☐	☐	☒	☐ Repair as needed ☐ Note:
ITEM				**RECOMMENDATIONS**
Parking and Drop-off Areas	**n/a**	**Yes**	**No**	**Parking and Drop-off Areas**
☒ Check here if section does not apply to this park and move to next section.				
5. Are an adequate number of accessible parking spaces available? The table below gives the ADAAG requirement for new construction and alterations (for lots with more than 100 spaces refer to ADAAG). Accessible Spaces per Overall spaces	☐	☐	☐	☐ Reconfigure a reasonable number of spaces by repainting stripes. ☐ Construct accessible routes ☐ Note:

Total Spaces	Accessible Spaces Required
1 to 25	1 space
26 to 50	2 spaces
51 to 75	3 spaces
76 to 100	4 spaces

[1] Accessible routes must comply with ADAAG provisions for the location, width (minimum 36 inches) passing space, head room, surface, slope (Maximum 1:12 (or 8.33%). Accessible routes must connect all accessible elements within the facility. Accessible routes must be stable, firm and slip resistant. There is no requirement to change the surface of a playing field to an accessible surface.

6. Are an adequate number of van accessible spaces provided? At least 1 of every 8 accessible spaces must be van-accessible (with a minimum of 1 van-accessible space in all cases.)	☐	☐	☐	☐ Reconfigure to provide van-accessible space(s).
7. Are the access aisles part of the accessible route?	☐	☐	☐	☐ Add curb ramps. ☐ Reconstruct sidewalk
8. Are the accessible spaces closest to the accessible entrance?	☐	☐	☐	☐ Reconfigure spaces.
9. Are accessible spaces marked with and International Symbol of Accessibility? Are there signs reading "Van Accessible" at van spaces?	☐	☐	☐	☐ Add signs, placed so that they are not obstructed by cars.
10. Is there an enforcement procedure to ensure that accessible parking is used only by those who need it?	☐	☐	☐	☐ Implement a policy to check periodically for violators and report them to the proper authorities.
Team Player Seating Areas	**n/a**	**Yes**	**No**	**Team Player Seating Areas**
☒ Check here if section does not apply to this park and move to next section.				
11. Do fixed team or player seating areas contain the required number of wheelchair spaces and companion seats required by ADAAG?	☐	☐	☐	☐ Renovate as needed ☐ Install accessible seating area ☐ Note
Restrooms	**n/a**	**Yes**	**No**	**Restrooms**
☒ Check here if section does not apply to this park and move to next section.				
12. If rest rooms are available to the public, is at least one rest room (either one for each sex, or unisex) fully accessible?	☐	☐	☐	☐ Reconfigure rest room. ☐ Combine rest rooms to create one unisex accessible rest room. ☐ Note:
13. Are there signs at inaccessible rest rooms that give directions to accessible ones?	☐	☐	☐	☐ Install accessible signs. ☐ Note:
14. Is there tactile signage identifying rest rooms? *Note: Mount signs on the wall, on the latch side of the door, complying with the permanent signage.*	☐	☐	☐	☐ Add accessible signage, placed to the side of the door, 60 inches to centerline (not on the door itself). ☐ If symbols are used, add supplementary verbal signage. ☐ Note:
15. Are pictograms or symbols used to identify rest rooms, and, if used, are raised characters and braille included below?	☐	☐	☐	☐ If symbols are used, add supplementary verbal signage with raised characters and braille below pictogram symbol. ☐ Note:
16. Is the doorway at least 32 inches clear?	☐	☐	☐	☐ Install offset (swing-clear) hinges. ☐ Widen the doorway. ☐ Note:
17. Are doors equipped with accessible handles (operable with a closed fist), 48 inches high or less?	☐	☐	☐	☐ Lower handles. ☐ Replace knobs or latches with lever or loop handles. ☐ Add lever extensions. ☐ Install power-assisted or automatic door openers. ☐ Note:

18. Can doors be opened easily (5 lbf maximum force)?	☐	☐	☐	☐ Adjust or replace closers. ☐ Install lighter doors. ☐ Install power-assisted or automatic door openers. ☐ Note:
19. Does the entry configuration provide adequate maneuvering space for a person using a wheelchair? *Note: A person using a wheelchair needs 36 inches of clear width for forward movement, and a 5-foot diameter clear space or a T-shaped space to make turns. A minimum distance of 48 inches clear of the door swing is needed between the two doors of an entry vestibule.*	☐	☐	☐	☐ Rearrange furnishings such as chairs and trash cans. ☐ Remove inner door if there is a vestibule with two doors. ☐ Move or remove obstructing partitions. ☐ Note:
20. Is there a 36-inch-wide path to all fixtures?	☐	☐	☐	☐ Remove obstructions. ☐ Note:
21. Is the stall door operable with a closed fist, inside and out?	☐	☐	☐	☐ Replace inaccessible knobs with lever or loop handles. ☐ Add lever extensions. ☐ Note:
22. Is there a wheelchair-accessible stall that has an area of at least 5 feet by 5 feet, clear of the door swing, OR is there a stall that is less accessible but that provides greater access than a typical stall (either 36 by 69 inches or 48 by 69 inches)?	☐	☐	☐	☐ Move or remove partitions. ☐ Reverse the door swing if it is safe to do so. ☐ Note:
23. In the accessible stall, are there grab bars behind and on the side wall nearest to the toilet?	☐	☐	☐	☐ Add grab bars. ☐ Note:
24. Is the toilet seat 17 to 19 inches high?	☐	☐	☐	☐ Add raised seat. ☐ Note:
25. Does one lavatory have a 30-inch-wide by 48-inch-deep clear space in front? *Note: A maximum of 19 inches of the required depth may be under the lavatory.*	☐	☐	☐	☐ Rearrange furnishings. ☐ Replace lavatory. ☐ Remove or alter cabinetry to provide space underneath. Make sure hot pipes are covered. ☐ Move a partition or wall. ☐ Note:
26. Is the lavatory rim no higher than 34 inches?	☐	☐	☐	☐ Adjust or replace lavatory. ☐ Note:
27. Is there at least 29 inches from the floor to the bottom of the lavatory apron? (Excluding pipes)?	☐	☐	☐	☐ Adjust or replace lavatory. ☐ Note:
28. Can the faucet be operated with one closed fist?	☐	☐	☐	☐ Replace faucet handles with paddle type. ☐ Note:
29. Are soap and other dispensers and hand dryers within reach ranges (see page 7) and usable with one closed fist?	☐	☐	☐	☐ Lower dispensers. ☐ Replace with or provide additional accessible dispensers. ☐ Note:
30. Is the mirror mounted with the bottom edge of the reflecting surface 40 inches high or lower?	☐	☐	☐	☐ Lower or tilt down the mirror. ☐ Add a larger mirror anywhere in the room. ☐ Note:
Pit Toilets	**n/a**	**Yes**	**No**	**Pit Toilets**
31.				

☒ Check here if section does not apply to this park and move to next section.				
32. Is there a clear space of 60 inches by 60 inches adjacent to the toilet?	☐	☐	☐	☐ Repair as needed ☐ Note:
33. Does the height of the pit toilet riser comply with ADAAG 4.16.3?	☐	☐	☐	☐ Repair as needed ☐ Note:
34. Is the maneuvering space less than or equal to 1:50? (1:33 maximum allowed for drainage)	☐	☐	☐	☐ Repair as needed ☐ Note:
35. If the pit toilet has walls, are grab bars installed consistent with ADAAG 4.16.4?	☐	☐	☐	☐ Repair as needed ☐ Note:
36. Is the surface adjacent to the pit toilet firm and stable?	☐	☐	☐	☐ Repair as needed ☐ Note:
Utilities	**n/a**	**Yes**	**No**	**Utilities**
☒ Check here if section does not apply to this park and move to next section.				
37. Is the maneuvering space less than or equal to 1:50? (1:33 maximum allowed for drainage)	☐	☐	☐	☐ Repair as needed ☐ Note:
38. Is the surface adjacent to the utility firm and stable?	☐	☐	☐	☐ Repair as needed ☐ Note:
39. Are fixed water spouts located 28 inches minimum to 36 inches maximum above the ground or floor space?	☐	☐	☐	☐ Repair as needed ☐ Note:
40. Is the maneuvering space less than or equal to 1:50? (1:33 maximum allowed for drainage)	☐	☐	☐	☐ Repair as needed ☐ Note:
Drinking Fountains	**n/a**	**Yes**	**No**	**Drinking Fountains**
☒ Check here if section does not apply to this park and move to next section.				
41. Is there at least one fountain with clear floor space of at least 30 by 48 inches in front?	☐	☐	☐	☐ Clear more room by rearranging or removing furnishings. ☐ Note:
42. Is there one fountain with its spout no higher than 36 inches from the ground, and another with a standard height spout (or a single "hi-lo" fountain)?	☐	☐	☐	☐ Provide cup dispensers for fountains with spouts that are too high. ☐ Provide accessible water cooler. ☐ Note:
43. Are controls mounted on the front or on the side near the front edge, and operable with one closed fist?	☐	☐	☐	☐ Replace the controls. ☐ Note:
44. Is each water fountain cane-detectable (located within 27 inches off the floor or protruding less than 4 inches from the wall, into the circulation path?	☐	☐	☐	☐ Place a planter or other cane-detectable barrier on each side at floor level. ☐ Note:
Telephones	**n/a**	**Yes**	**No**	**Telephones**
☒ Check here if section does not apply to this park and move to next section.				
45. If pay or public use phones are provided, is there clear floor space of at least 30 by 48 inches in front of at least one?	☐	☐	☐	☐ Move furnishings. ☐ Replace booth with open station. ☐ Note:
46. Is the highest operable part of the phone no higher than 48 inches (up to 54 inches if a side approach is possible)?	☐	☐	☐	☐ Lower telephone. ☐ Note:
47. Does the phone protrude no more than 4 inches into the circulation space?	☐	☐	☐	☐ Place a cane-detectable barrier on each side at floor level. ☐ Note:

48. Does the phone have push-button controls?	☐	☐	☐	☐ Contact phone company to install push-buttons. ☐ Note:
49. Is the phone hearing-aid compatible?	☐	☐	☐	☐ Contact phone company to replace with hearing-aid compatible phone. ☐ Note:
50. Is the phone adapted with volume control?	☐	☐	☐	☐ Contact the phone company to add volume control. ☐ Note:
51. Is the phone with volume control identified with appropriate signage?	☐	☐	☐	☐ Add signage. ☐ Note:
52. If there are four or more public phones in the building, is one of the phones equipped with a text telephone (TT or TDD)?	☐	☐	☐	☐ Install a text telephone. ☐ Have a portable text telephone available. ☐ Provide a shelf and outlet next to phone. ☐ Note:
53. Is the location of the text telephone identified by accessible signage bearing the International TDD Symbol?	☐	☐	☐	☐ Add signage. ☐ Note:

Directional and Informational Signage	**n/a**	**Yes**	**No**	**Directional and Informational Signage**
☐ Check here if section does not apply to this park and move to next section.				
54. If mounted about 80 inches, do they have letters at least 3 inches high, with high contrast, and non-glare finish?	☐	☐	☒	☒ Review requirements and replace signs as needed, meeting the requirements for character size, contrast, and finish. ☐ Note:
55. Do directional and informational signs comply with legibility requirements? 56. (Building directories or temporary signs need not comply.)	☐	☐	☒	☒ Review requirements and replace signs as needed, meeting the requirements for character size, contrast, and finish. ☐ Note:

Seats, Tables and Counters	**n/a**	**Yes**	**No**	**Seats, Tables and Counters**
☐ Check here if section does not apply to this park and move to next section.				
50. Are the spaces for wheelchair seating distributed throughout? (Cover or uncovered gathering areas, bleachers)	☐	☐	☒	☐ Rearrange tables to allow room for wheelchairs in seating areas throughout the area. ☐ Remove some fixed seating. ☐ Note:
51. If picnic tables are provided, are at least 50% and no less than two of the tables, accessible?	☐	☐	☒	☐ Replace as needed ☐ Note: **4 picnic tables, no W/C spaces**
52. Are knee spaces at accessible picnic tables at least 27 inches high, 30 inches wide, and 19 inches deep?	☐	☐	☒	☐ Replace or raise tables. ☐ Note:
53. Are picnic tables spaced such that all areas of the table are accessible?	☐	☐	☒	☐ Rearrange tables to allow room for wheelchairs in seating areas throughout the area. ☐ Remove some fixed seating. ☐ Note:
54. At each type of cashier counter, is there a portion of the main counter that is no more than 36 inches high?	☒	☐	☐	☐ Provide a lower auxiliary counter or folding shelf. ☐ Arrange the counter and surrounding furnishings to create a space to hand items back and forth.

				☐ Note:
55. Is there a portion of food-ordering counters that is no more than 36 inches high, or is there space at the side for passing items to customers who have difficulty reaching over a high counter?	☐	☐	☐	☐ Lower section of counter. ☐ Arrange the counter and surrounding furnishings to create a space to pass items. ☐ Note:
Fire Rings	**n/a**	**Yes**	**No**	**Fire Rings**
☒ Check here if section does not apply to this park and move to next section.				
56. Do all fire rings have a clear space extending a minimum 48" deep by 48" wide at all usable portions of the ring?	☐	☐	☐	☐ Install clear spaces as needed ☐ Note:
57. Are the clear spaces around the fire pit on a firm and stable surface?	☐	☐	☐	☐ Correct as needed ☐ Note:
58. Is the fire surface height a minimum of 9" above the ground/floor?	☐	☐	☐	☐ Construct or renovate pits to meet clearances ☐ Note:
59. Are the slopes around fire pits not more than 1:50?	☐	☐	☐	☐ Construct or renovate pits to meet clearances ☐ Note:
Cooking Surfaces, Grills, Pedestal Grills[2]	**n/a**	**Yes**	**No**	**Cooking Surfaces, Grills, Pedestal Grills**
☒ Check here if section does not apply to this park and move to next section.				
60. Are accessible cooking features dispersed throughout the area and among the types provided?	☐	☐	☐	☐ Evenly disperse cooking features ☐ Note:
61. Are accessible cooking feature surfaces installed between 15 inches and 34 inches above the ground/floor?	☐	☐	☐	☐ Install as required ☐ Note:
62. Do operating controls and mechanisms comply with current ADAAG 4.27.1 (General) 4.27.2 (Clear Floor Space and 4.27.3 (Height)?	☐	☐	☐	☐ Install as required ☐ Note:
Fixed Trash/Recycling Containers	**n/a**	**Yes**	**No**	**Fixed Trash/Recycling Containers**
☒ Check here if section does not apply to this park and move to next section.				
63. Are trash and recycling containers accessible and do they comply with ADAAG 4.27?	☐	☐	☐	☐ Replace as needed ☐ Note:
Overlooks/Viewing Areas	**n/a**	**Yes**	**No**	**Overlooks/Viewing Areas**
☒ Check here if section does not apply to this park and move to next section.				
64. Are all viewing areas on an accessible route?	☐	☐	☐	☐ Install accessible paths as needed ☐ Note:
65. Are all viewing areas constructed to provide an unobstructed view?	☐	☐	☐	☐ Repair as needed ☐ Note:
66. Is there at least one maneuvering space that complies with ADAAG 4.2.3?	☐	☐	☐	☐ Repair as needed ☐ Note:
67. Is the ground surface firm and stable?	☐	☐	☐	☐ Repair as needed ☐ Note:

[2] Where there is only one cooking surface, grill or pedestal grill in a provided picnic area, it shall be accessible. Where multiple cooking features are provided in a picnic area, 50 percent, but no less than 2 shall be accessible.

68. Is the maneuvering space less than or equal to 1:50? (1:33 maximum allowed for drainage)	☐	☐	☐	☐ Repair as needed ☐ Note:
Telescopes/Periscopes	**n/a**	**Yes**	**No**	**Telescopes/Periscopes**
☒ Check here if section does not apply to this park and move to next section.				
69. Are at least 20%, but not less than one, telescope or periscope that complies with ADAAG 4.27?	☐	☐	☐	☐ Repair as needed ☐ Note:
70. Are the eye pieces usable from a seated position?	☐	☐	☐	☐ Repair as needed ☐ Note:
71. Is the ground surface firm and stable?	☐	☐	☐	☐ Repair as needed ☐ Note:
72. Is the maneuvering space less than or equal to 1:50? (1:33 maximum allowed for drainage)	☐	☐	☐	☐ Repair as needed ☐ Note:
Benches	**n/a**	**Yes**	**No**	**Benches**
☒ Check here if section does not apply to this park and move to next section.				
73. Where multiple benches are provided, are at least 50% consistent with this section?	☐	☐	☐	☐ Repair as needed ☐ Note:
74. Are accessible benches dispersed evenly throughout the park?	☐	☐	☐	☐ Disperse benches evenly throughout the park ☐ Note: just at play area
75. Of the accessible benches that are provided, do at least 50% of those benches have armrests consistent with ADAAG 4.26.3?	☐	☐	☐	☐ Repair as needed ☐ Note:
76. Are the front edges of accessible benches between 17 and 19 inches maximum above the ground/floor?	☐	☐	☐	☐ Repair as needed ☐ Note:
77. Are floor spaces adjacent to benches consistent with ADAAG 4.2.4?	☐	☐	☐	☐ Repair as needed ☐ Note:
78. Is the ground/floor surface around the accessible benches firm and stable?	☐	☐	☐	☐ Repair as needed ☐ Note:
79. Do all accessible benches have back support the full length of the bench?	☐	☐	☐	☐ Repair as needed ☐ Note:
Playground Equipment Accessibility	**n/a**	**Yes**	**No**	**Playground Equipment Accessibility**
☒ Check here if section does not apply to this park and move to next section.				
80. Is there at least one of each play component on an accessible route[3]?	☐	☐	☐	☐ Expand existing accessible routes as needed ☐ Construct accessible routes ☐ Note: bark surface
81. Is there at least one of each ground-level play component on an accessible route?	☐	☐	☐	☐ Expand existing accessible routes as needed ☐ Construct accessible routes ☐ Note:
82. Are the play components integrated for use by all children; including those with disabilities?	☐	☐	☐	☐ Ensure play components on accessible routes can be used by all children ☐ Note:

[3] Different types of play components are based on the general experience provided by the play component. Different types include, but are no limited to, rocking, swinging, climbing, spinning and sliding. Components may be elevated or at or below ground level.

Trails	n/a	Yes	No	Trails
☐ Check here if section does not apply to this park and move to next section.				
83. Is the clear width of the trail 36 inches?	☐	☒	☐	☐ Renovate as required ☐ Construct all new trails to code ☐ Note:
84. Are openings in the trail less than ½ inch? *Note: (Board slat spaces, etc. – Elongated openings should be placed so that the long dimension is perpendicular or diagonal to the dominate direction of travel.)*	☐	☒	☐	☐ Renovate as required ☐ Construct all new trails to code ☐ Note:
85. Is the trail free of constructed or natural barriers?	☐	☒	☐	☐ Remove as needed ☐ Note:
86. Are all overhead hazards maintained at a height that is sufficient for all expected users of the trail? (Remember, Objects that protrude into a pathway at a height greater than 27" are difficult for the blind or persons with visual disabilities who use canes to detect.)	☐	☒	☐	☐ Renovate as required ☐ Construct all new trails to code ☐ Note:
87. Is there a segment in the trail that has a 10% grade for more than 30 feet?	☐	☐	☒	☐ Construct level rest interval[4] ☐ Note:
88. Are all cross slopes a maximum of 3%?	☐	☒	☐	☐ Renovate as required ☐ Construct all new trails to code ☐ Note:
89. Are all tread obstacles a maximum of 1"?	☐	☒	☐	☐ Renovate as required ☐ Construct all new trails to code ☐ Note:
90. Are passing spaces (6" x 60") provided at maximum intervals of 200 ft. whenever the clear tread width is less then 60"?	☒	☐	☐	☐ Renovate as required ☐ Construct all new trails to code ☐ Note:
91. Does the trail have or require edge protection?	☐	☐	☒	☐ Renovate as required – Where provided, edge protection should be a minimum of 3". ☐ Construct all new trails to code ☐ Note:
92. Does the trail have signs that clearly indicate the type of use, rules and difficult conditions for the trail?	☐	☐	☒	☐ Renovate as required ☐ Construct all new trails to code ☐ Note:
93. Are there signs that warn users that changes in trail level or tread obstacles could not be removed?	☐	☐	☒	☐ Renovate as required ☐ Construct all new trails to code ☐ Note:
94. Are there detectable warnings anywhere a route crosses a traffic way?	☐	☐	☒	☐ Repair as needed ☐ Note:
Shooting Facilities	**n/a**	**Yes**	**No**	**Shooting Facilities**
☒ Check here if section does not apply to this park and move to next section.				
95. Does the English Pit range have 60-inch diameter space with slopes not steeper than 1:48 so a wheelchair can turn around?	☐	☐	☐	☐ Renovate as needed ☐ Install accessible seating area ☐ Note

[4] Resting intervals must be 60" minimum on length and at least as wide as the widest portion of the trail segment leading to the resting interval with a cross slope that does not exceed 3%.

96. Do the firing benches have a wheelchair accessible area with a bench between 27 and 34 inches with a minimum of 19" leg space?	☐	☐	☐	☐ Renovate as needed ☐ Install accessible seating area ☐ Note
97. If fixed firing positions are provided, at least 5% but not less than one of each type of firing position, must be served by an accessible route. Does English Pit have an accessible route?	☐	☐	☐	☐ Renovate as needed ☐ Install accessible route ☐ Note
98. Does the park have accessible routes to all target impact areas?	☐	☐	☐	☐ Expand existing accessible routes as needed ☐ Construct accessible routes ☐ Note:
Aquatic Recreation Facilities	**n/a**	**Yes**	**No**	**Aquatic Recreation Facilities**
☒ Check here if section does not apply to this park and move to next section.				
99. Is there an accessible route (36" wide) over beach areas that allow access to the water's edge?	☐	☐	☐	☐ Renovate as needed ☐ Install accessible route ☐ Note
100. Are there accessible routes with handrails that lead into designated swim areas such as ponds, lakes, etc.	☐	☐	☐	☐ Renovate as needed ☐ Install accessible route ☐ Note
Fishing piers and Platforms	**n/a**	**Yes**	**No**	**Fishing piers and Platforms**
☒ Check here if section does not apply to this park and move to next section.				
101. Does this park have a facility specifically designed and constructed for fishing?	☐	☐	☐	(Structures that were not built specifically for fishing do not need to meet ADAAG guidelines. Structures designed as fishing piers or platforms, must have an accessible route.)
102. Does the park have a gangway serving the fishing pier or platform?	☐	☐	☐	☐ Install a gangway platform – Gangway 1:12 maximum slope or at least 30 feet long. ☐ Renovate existing platform to meet code (Check specific building codes) ☐ Note
103. Does the gangway have a transition plate to the pier or platform that meets code?	☐	☐	☐	☐ Install a transition plate[5] ☐ Adjust existing transition plate to meet code ☐ Note
104. Does the gangway have handrails?	☐	☐	☐	☐ Install handrail to meet code ☐ Ensure existing rails meet code ☐ Note
105. Does the fishing pier or platform have railings, guards or handrails[6]?	☐	☐	☐	☐ Install as needed ☐ Renovate existing structure to meet code ☐ Note
106. Does the fishing pier or platform have edge protection[i]?	☐	☐	☐	☐ Install ☐ Renovate existing edge protection ☐ Note

[5] Gangways are not required to have to have landings at the end, if transition plates are provided. If the slope of the transition plate is greater that 1: 20 (5%), the transition plates must have a landing at the end of the transition plate not connected to the gangway and must comply with other ramp requirements.

[6] Where railings, guards or handrails are provided on a fishing pier or platform, at least 25 % of the rails must be 34 inches or less in height above the ground or dock so accommodate a person in a wheelchair. These railings must be dispersed as equally as possible to all areas of the fishing pier.

107. Does the fishing pier or platform have clear floor or ground space[ii]?	☐	☐	☐	☐ Install ☐ Renovate existing edge protection ☐ Note
108. Does the fishing pier or platform have sufficient turning space[iii]?	☐	☐	☐	☐ Install ☐ Renovate existing edge protection ☐ Note
Boating Facilities	**n/a**	**Yes**	**No**	**Boating Facilities**
☒ Check here if section does not apply to this park and move to next section.				
109. Is there an accessible route to the boating facilities?	☐	☐	☐	☐ Install ☐ Renovate existing route ☐ Note
110. Does the gangway to the dock or floating dock deigned to provide for a maximum 1:12 (8.33%) slope ? *Note: Not required to be longer than 80 feet. (Elevators may be used in lieu of gangways) In smaller facilities with less than 25 boat slips, the slope of the gangway may exceed 1:12, if the gangway is at least 30 feet long.*	☐	☐	☐	☐ Install ☐ Renovate existing route ☐ Note
111. Does the gangway have a transition plate to the pier or platform that meets code[iv]?	☐	☐	☐	☐ Install a transition plate ☐ Adjust existing transition plate to meet code ☐ Note

<table>
<tr><td>112. Where boat slips[7] are provided, does the number of accessible slips[8] comply with the table to the right?
Note: If boat slips at a facility are not identified or demarcated by length, each 40 feet of boat slip edge along the perimeter of a pier will be counted as one boat slip</td><td>☐</td><td>☐</td><td>☐</td><td>
<table>
<tr><th colspan="2">Number of Accessible Boat Slips Required</th></tr>
<tr><td>Total Slips in Facility</td><td>Minimum Accessible Slips</td></tr>
<tr><td>1-25</td><td>1</td></tr>
<tr><td>26-50</td><td>2</td></tr>
<tr><td>50-100</td><td>3</td></tr>
<tr><td>101-150</td><td>4</td></tr>
</table>
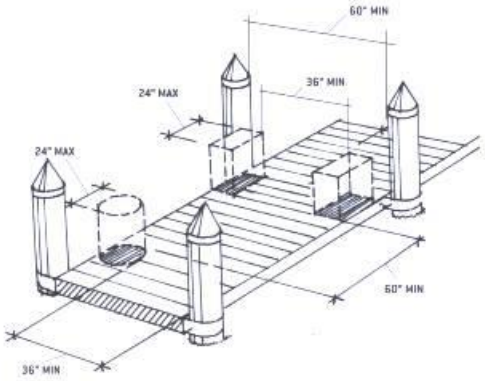

PIER CLEARANCE SPACE REDUCTION
</td></tr>
<tr><td>If the facility only has a boarding pier (see footnote # 9) at least 5% but not less than, must comply with these guidelines. The entire length of accessible boarding piers must comply with the same provisions that apply to slips.

113. Does this facility meet this regulation?</td><td>☐</td><td>☐</td><td>☐</td><td>☐ Install
☐ Renovate boarding pier
☐ Note</td></tr>
<tr><td>114. Is this facility compromised only of a boat launch with no boarding ramp or pier?</td><td>☐</td><td>☐</td><td>☐</td><td>If yes, there are no specific provisions that address access to launch ramps without boarding piers.</td></tr>
</table>

[7] A boat slip is the portion of a pier, main pier, finger pier, or float where a boat is berthed or moored, or used for embarking or disembarking. Boarding piers that are not part of a boat launch ramp are classified as “boat slips” for the purpose of this survey.

[8] Accessible boat slips must have clear pier space at least 60 inches wide and as long as the slip. Every 10 feet of linear pier edge serving the accessible slips must have at least one continuous clear opening that is at least 60 inches wide. The width of the clear pier space may be 36 inches wide for a length of 24 inches, as long as multiple 36-inch segments are separated by segments that are 60 inches minimum clear in width and 60 inches minimum clear in length, and the clear openings are at least 60 inches deep. Edge protection is not required

Item Number	Notes
	4 existing picnic tables in the grass; no H/C accomodations

4.2.3* Wheelchair Turning Space. The space required for a wheelchair to make a 180-degree turn is a clear space of 60 in (1525 mm) diameter (see Fig. 3(a)) or a T-shaped space (see Fig. 3(b)). Appendix Note

4.2.4* Clear Floor or Ground Space for Wheelchairs.

4.2.4.1 Size and Approach. The minimum clear floor or ground space required to accommodate a single, stationary wheelchair and occupant is 30 in by 48 in (760 mm by 1220 mm) (see Fig. 4(a)). The minimum clear floor or ground space for wheelchairs may be positioned for forward or parallel approach to an object (see Fig. 4(b) and (c)). Clear floor or ground space for wheelchairs may be part of the knee space required under some objects.

4.2.4.2 Relationship of Maneuvering Clearance to Wheelchair Spaces. One full unobstructed side of the clear floor or ground space for a wheelchair shall adjoin or overlap an accessible route or adjoin another wheelchair clear floor space. If a clear floor space is located in an alcove or otherwise confined on all or part of three sides, additional maneuvering clearances shall be provided as shown in Fig. 4(d) and (e).

4.2.4.3 Surfaces for Wheelchair Spaces. Clear floor or ground spaces for wheelchairs shall comply with 4.5. Appendix Note

4.16.3* Height. The height of water closets shall be 17 in to 19 in (430 mm to 485 mm), measured to the top of the toilet seat (see Fig. 29(b)). Seats shall not be sprung to return to a lifted position. Appendix Note

4.16.4* Grab Bars. Grab bars for water closets not located in stalls shall comply with 4.26 and Fig. 29. The grab bar behind the water closet shall be 36 in (915 mm) minimum. Appendix Note

4.26.3 Structural Strength. The structural strength of grab bars, tub and shower seats, fasteners, and mounting devices shall meet the following specification:

(1) Bending stress in a grab bar or seat induced by the maximum bending moment from the application of 250 lbf (1112N) shall be less than the allowable stress for the material of the grab bar or seat.

(2) Shear stress induced in a grab bar or seat by the application of 250 lbf (1112N) shall be less than the allowable shear stress for the material of the grab bar or seat. If the connection between the grab bar or seat and its mounting bracket or other support is considered to be fully restrained, then direct and torsional shear stresses shall be totaled for the combined shear stress, which shall not exceed the allowable shear stress.

(3) Shear force induced in a fastener or mounting device from the application of 250 lbf (1112N) shall be less than the allowable lateral load of either the fastener or mounting device or the supporting structure, whichever is the smaller allowable load.

(4) Tensile force induced in a fastener by a direct tension force of 250 lbf (1112N) plus the maximum moment from the application of 250 lbf (1112N) shall be less than the allowable withdrawal load between the fastener and the supporting structure.

(5) Grab bars shall not rotate within their fittings.

4.27 Controls and Operating Mechanisms.

4.27.1 General. Controls and operating mechanisms required to be accessible by 4.1 shall comply with 4.27.

4.27.2 Clear Floor Space. Clear floor space complying with 4.2.4 that allows a forward or a parallel approach by a person using a wheelchair shall be provided at controls, dispensers, receptacles, and other operable equipment.

4.27.3* Height. The highest operable part of controls, dispensers, receptacles, and other operable equipment shall be placed within at least one of the reach ranges specified in 4.2.5 and 4.2.6. Electrical and communications system receptacles on walls shall be mounted no less than 15 in (380 mm) above the floor. Appendix Note

EXCEPTION: These requirements do not apply where the use of special equipment dictates otherwise or where electrical and communications systems receptacles are not normally intended for use by building occupants.

4.27.4 Operation. Controls and operating mechanisms shall be operable with one hand and shall not require tight grasping, pinching, or twisting of the wrist. The force required to activate controls shall be no greater than 5 lbf (22.2 N).

---

[i] Where railings, guards or handrails are provided, edge protection must be provided and extended a minimum of 2 inches above the ground or deck surface. Edge protection is not required where a railing, guardrail or handrail is provided, if the deck surface extends a minimum of 12 inches beyond the inside face of the railing.

[ii] At least one clear floor or ground space (30 inches by 48 inches) must be provided at each location that has a railing height of 34 inches maximum. If there is no railing, at least one clear space must be provided on a pier or platform.

[iii] Fishing piers and platforms must have at least one turning area, either 60-inch turning space or a T-shaped space to allow a person using a mobility device or wheelchair to make a 180-degree turn.

[iv] Gangways are not required to have to have landings at the end, if transition plates are provided. If the slope of the transition plate is greater that 1: 20 (5%), the transition plates must have a landing at the end of the transition plate not connected to the gangway and must comply with other ramp requirements.

ADA Compliance Program

MEDFORD PARKS AND RECREATION DEPARTMENT

ADA ACCESSIBILITY SURVEY FOR PARK FACILITIES

Date: **March 3, 2016** **Estimated Cost:**

Facility: **Fitchner-Mainwaring Park** **Department Notified:**

Survey by: **Jean Akers** **Date of Notification:**

Check all applicable building codes and ADAAG publications prior to any renovation or construction. This survey is only a guideline.

ITEM				RECOMMENDATIONS
Accessible Routes[1]	**n/a**	**Yes**	**No**	**Accessible Routes**
☐ Check here if section does not apply to this park and move to next section.				
1. Does the park have accessible routes to all accessible facilities within the park?	☐	☐	☒	☐ Expand existing accessible routes as needed ☐ Construct accessible routes ☐ Note:
2. Where court sports are provided (i.e. tennis, basketball, and volleyball) are there accessible routes to each court? (Routes must connect both sides of the court) **Only center aisle=accessible for tennis courts**	☐	☐	☒	☐ Expand existing accessible routes as needed ☐ Construct accessible routes ☐ Note: **Sand volleyball =no accessible route**
3. Are there accessible routes to any and all animal containment areas?	☒	☐	☐	☐ Expand existing accessible routes as needed ☐ Construct accessible routes ☐ Note:
4. Are there detectable warnings anywhere a route crosses a traffic way?	☐	☐	☒	☐ Repair as needed ☐ Note:
ITEM				**RECOMMENDATIONS**
Parking and Drop-off Areas	**n/a**	**Yes**	**No**	**Parking and Drop-off Areas**
☐ Check here if section does not apply to this park and move to next section.				
5. Are an adequate number of accessible parking spaces available? The table below gives the ADAAG requirement for new construction and alterations (for lots with more than 100 spaces refer to ADAAG). Accessible Spaces per Overall spaces	☐	☐	☒	☒ Reconfigure a reasonable number of spaces by repainting stripes. ☐ Construct accessible routes ☐ Note:

Total Spaces	Accessible Spaces Required
60 spaces (east)	**2 spaces**
1 to 25	1 space
26 to 50	2 spaces
51 to 75	3 spaces
76 to 100	4 spaces

[1] Accessible routes must comply with ADAAG provisions for the location, width (minimum 36 inches) passing space, head room, surface, slope (Maximum 1:12 (or 8.33%). Accessible routes must connect all accessible elements within the facility. Accessible routes must be stable, firm and slip resistant. There is no requirement to change the surface of a playing field to an accessible surface.

6. Are an adequate number of van accessible spaces provided? At least 1 of every 8 accessible spaces must be van-accessible (with a minimum of 1 van-accessible space in all cases.)	☐	☐	☐	☐ Reconfigure to provide van-accessible space(s).
7. Are the access aisles part of the accessible route?	☐	☐	☐	☐ Add curb ramps. ☐ Reconstruct sidewalk
8. Are the accessible spaces closest to the accessible entrance?	☐	☐	☐	☐ Reconfigure spaces.
9. Are accessible spaces marked with and International Symbol of Accessibility? Are there signs reading "Van Accessible" at van spaces?	☐	☐	☐	☐ Add signs, placed so that they are not obstructed by cars.
10. Is there an enforcement procedure to ensure that accessible parking is used only by those who need it?	☐	☐	☐	☐ Implement a policy to check periodically for violators and report them to the proper authorities.
Team Player Seating Areas	**n/a**	**Yes**	**No**	**Team Player Seating Areas**
☐ Check here if section does not apply to this park and move to next section.				
11. Do fixed team or player seating areas contain the required number of wheelchair spaces and companion seats required by ADAAG?	☐	☐	☒	☐ Renovate as needed ☐ Install accessible seating area ☒ Note: **team seating not provided**
Restrooms	**n/a**	**Yes**	**No**	**Restrooms**
☐ Check here if section does not apply to this park and move to next section.				
12. If rest rooms are available to the public, is at least one rest room (either one for each sex, or unisex) fully accessible?	☐	☒	☐	☐ Reconfigure rest room. ☐ Combine rest rooms to create one unisex accessible rest room. ☐ Note:
13. Are there signs at inaccessible rest rooms that give directions to accessible ones?	☐	☐	☒	☐ Install accessible signs. ☐ Note:
14. Is there tactile signage identifying rest rooms? *Note: Mount signs on the wall, on the latch side of the door, complying with the permanent signage.*	☐	☒	☐	☐ Add accessible signage, placed to the side of the door, 60 inches to centerline (not on the door itself). ☐ If symbols are used, add supplementary verbal signage. ☐ Note:
15. Are pictograms or symbols used to identify rest rooms, and, if used, are raised characters and braille included below?	☐	☒	☐	☐ If symbols are used, add supplementary verbal signage with raised characters and braille below pictogram symbol. ☐ Note:
16. Is the doorway at least 32 inches clear?	☐	☒	☐	☐ Install offset (swing-clear) hinges. ☐ Widen the doorway. ☐ Note:
17. Are doors equipped with accessible handles (operable with a closed fist), 48 inches high or less?	☐	☐	☒	☒ Lower handles. **East restrooms** ☒ Replace knobs or latches with lever or loop handles. ☐ Add lever extensions. ☐ Install power-assisted or automatic door openers. ☐ Note:

18. Can doors be opened easily (5 lbf maximum force)?	☐	☐	☐	☐ Adjust or replace closers. ☐ Install lighter doors. ☐ Install power-assisted or automatic door openers. ☐ Note:
19. Does the entry configuration provide adequate maneuvering space for a person using a wheelchair? *Note: A person using a wheelchair needs 36 inches of clear width for forward movement, and a 5-foot diameter clear space or a T-shaped space to make turns. A minimum distance of 48 inches clear of the door swing is needed between the two doors of an entry vestibule.*	☐	☐	☐	☐ Rearrange furnishings such as chairs and trash cans. ☐ Remove inner door if there is a vestibule with two doors. ☐ Move or remove obstructing partitions. ☐ Note:
20. Is there a 36-inch-wide path to all fixtures?	☐	☐	☐	☐ Remove obstructions. ☐ Note:
21. Is the stall door operable with a closed fist, inside and out?	☐	☐	☐	☐ Replace inaccessible knobs with lever or loop handles. ☐ Add lever extensions. ☐ Note:
22. Is there a wheelchair-accessible stall that has an area of at least 5 feet by 5 feet, clear of the door swing, OR is there a stall that is less accessible but that provides greater access than a typical stall (either 36 by 69 inches or 48 by 69 inches)?	☐	☐	☐	☐ Move or remove partitions. ☐ Reverse the door swing if it is safe to do so. ☐ Note:
23. In the accessible stall, are there grab bars behind and on the side wall nearest to the toilet?	☐	☐	☐	☐ Add grab bars. ☐ Note:
24. Is the toilet seat 17 to 19 inches high?	☐	☐	☐	☐ Add raised seat. ☐ Note:
25. Does one lavatory have a 30-inch-wide by 48-inch-deep clear space in front? *Note: A maximum of 19 inches of the required depth may be under the lavatory.*	☐	☐	☐	☐ Rearrange furnishings. ☐ Replace lavatory. ☐ Remove or alter cabinetry to provide space underneath. Make sure hot pipes are covered. ☐ Move a partition or wall. ☐ Note:
26. Is the lavatory rim no higher than 34 inches?	☐	☐	☐	☐ Adjust or replace lavatory. ☐ Note:
27. Is there at least 29 inches from the floor to the bottom of the lavatory apron? (Excluding pipes)?	☐	☐	☐	☐ Adjust or replace lavatory. ☐ Note:
28. Can the faucet be operated with one closed fist?	☐	☐	☐	☐ Replace faucet handles with paddle type. ☐ Note:
29. Are soap and other dispensers and hand dryers within reach ranges (see page 7) and usable with one closed fist?	☐	☐	☐	☐ Lower dispensers. ☐ Replace with or provide additional accessible dispensers. ☐ Note:
30. Is the mirror mounted with the bottom edge of the reflecting surface 40 inches high or lower?	☐	☐	☐	☐ Lower or tilt down the mirror. ☐ Add a larger mirror anywhere in the room. ☐ Note:
Pit Toilets	**n/a**	**Yes**	**No**	**Pit Toilets**

31.				
☒ Check here if section does not apply to this park and move to next section.				
32. Is there a clear space of 60 inches by 60 inches adjacent to the toilet?	☐	☐	☐	☐ Repair as needed ☐ Note:
33. Does the height of the pit toilet riser comply with ADAAG 4.16.3?	☐	☐	☐	☐ Repair as needed ☐ Note:
34. Is the maneuvering space less than or equal to 1:50? (1:33 maximum allowed for drainage)	☐	☐	☐	☐ Repair as needed ☐ Note:
35. If the pit toilet has walls, are grab bars installed consistent with ADAAG 4.16.4?	☐	☐	☐	☐ Repair as needed ☐ Note:
36. Is the surface adjacent to the pit toilet firm and stable?	☐	☐	☐	☐ Repair as needed ☐ Note:
Utilities	**n/a**	**Yes**	**No**	**Utilities**
☒ Check here if section does not apply to this park and move to next section.				
37. Is the maneuvering space less than or equal to 1:50? (1:33 maximum allowed for drainage)	☐	☐	☐	☐ Repair as needed ☐ Note:
38. Is the surface adjacent to the utility firm and stable?	☐	☐	☐	☐ Repair as needed ☐ Note:
39. Are fixed water spouts located 28 inches minimum to 36 inches maximum above the ground or floor space?	☐	☐	☐	☐ Repair as needed ☐ Note:
40. Is the maneuvering space less than or equal to 1:50? (1:33 maximum allowed for drainage)	☐	☐	☐	☐ Repair as needed ☐ Note:
Drinking Fountains	**n/a**	**Yes**	**No**	**Drinking Fountains**
☐ Check here if section does not apply to this park and move to next section.				
41. Is there at least one fountain with clear floor space of at least 30 by 48 inches in front?	☐	☒	☐	☐ Clear more room by rearranging or removing furnishings. ☐ Note:
42. Is there one fountain with its spout no higher than 36 inches from the ground, and another with a standard height spout (or a single "hi-lo" fountain)?	☐	☒	☐	☐ Provide cup dispensers for fountains with spouts that are too high. ☐ Provide accessible water cooler. ☐ Note:
43. Are controls mounted on the front or on the side near the front edge, and operable with one closed fist?	☐	☒	☐	☐ Replace the controls. ☐ Note:
44. Is each water fountain cane-detectable (located within 27 inches off the floor or protruding less than 4 inches from the wall, into the circulation path?	☐	☒	☐	☐ Place a planter or other cane-detectable barrier on each side at floor level. ☐ Note: **East restroom fountain = good**
Telephones	**n/a**	**Yes**	**No**	**Telephones**
☒ Check here if section does not apply to this park and move to next section.				
45. If pay or public use phones are provided, is there clear floor space of at least 30 by 48 inches in front of at least one?	☐	☐	☐	☐ Move furnishings. ☐ Replace booth with open station. ☐ Note:
46. Is the highest operable part of the phone no higher than 48 inches (up to 54 inches if a side approach is possible)?	☐	☐	☐	☐ Lower telephone. ☐ Note:
47. Does the phone protrude no more than 4	☐	☐	☐	☐ Place a cane-detectable barrier on each

inches into the circulation space?				side at floor level. ☐ Note:
48. Does the phone have push-button controls?	☐	☐	☐	☐ Contact phone company to install push-buttons. ☐ Note:
49. Is the phone hearing-aid compatible?	☐	☐	☐	☐ Contact phone company to replace with hearing-aid compatible phone. ☐ Note:
50. Is the phone adapted with volume control?	☐	☐	☐	☐ Contact the phone company to add volume control. ☐ Note:
51. Is the phone with volume control identified with appropriate signage?	☐	☐	☐	☐ Add signage. ☐ Note:
52. If there are four or more public phones in the building, is one of the phones equipped with a text telephone (TT or TDD)?	☐	☐	☐	☐ Install a text telephone. ☐ Have a portable text telephone available. ☐ Provide a shelf and outlet next to phone. ☐ Note:
53. Is the location of the text telephone identified by accessible signage bearing the International TDD Symbol?	☐	☐	☐	☐ Add signage. ☐ Note:

Directional and Informational Signage	**n/a**	**Yes**	**No**	**Directional and Informational Signage**
☐ Check here if section does not apply to this park and move to next section.				
54. If mounted about 80 inches, do they have letters at least 3 inches high, with high contrast, and non-glare finish?	☐	☐	☒	☒ Review requirements and replace signs as needed, meeting the requirements for character size, contrast, and finish. ☐ Note:
55. Do directional and informational signs comply with legibility requirements? 56. (Building directories or temporary signs need not comply.)	☐	☐	☒	☒ Review requirements and replace signs as needed, meeting the requirements for character size, contrast, and finish. ☐ Note:

Seats, Tables and Counters	**n/a**	**Yes**	**No**	**Seats, Tables and Counters**
☐ Check here if section does not apply to this park and move to next section.				
50. Are the spaces for wheelchair seating distributed throughout? (Cover or uncovered gathering areas, bleachers)	☐	☐	☒	☐ Rearrange tables to allow room for wheelchairs in seating areas throughout the area. ☐ Remove some fixed seating. ☐ Note:
51. If picnic tables are provided, are at least 50% and no less than two of the tables, accessible?	☐	☐	☒	☐ Replace as needed ☒ Note: **Numerous picnic tables scattered thru-out grass**
52. Are knee spaces at accessible picnic tables at least 27 inches high, 30 inches wide, and 19 inches deep?	☐	☐	☒	☐ Replace or raise tables. ☐ Note:
53. Are picnic tables spaced such that all areas of the table are accessible?	☐	☐	☒	☐ Rearrange tables to allow room for wheelchairs in seating areas throughout the area. ☐ Remove some fixed seating. ☐ Note:
54. At each type of cashier counter, is there a portion of the main counter that is no more than 36 inches high?	☒	☐	☐	☐ Provide a lower auxiliary counter or folding shelf. ☐ Arrange the counter and surrounding

				furnishings to create a space to hand items back and forth. ☐ Note:
55. Is there a portion of food-ordering counters that is no more than 36 inches high, or is there space at the side for passing items to customers who have difficulty reaching over a high counter?	☒	☐	☐	☐ Lower section of counter. ☐ Arrange the counter and surrounding furnishings to create a space to pass items. ☐ Note:
Fire Rings	**n/a**	**Yes**	**No**	**Fire Rings**
☒ Check here if section does not apply to this park and move to next section.				
56. Do all fire rings have a clear space extending a minimum 48" deep by 48" wide at all usable portions of the ring?	☐	☐	☐	☐ Install clear spaces as needed ☐ Note:
57. Are the clear spaces around the fire pit on a firm and stable surface?	☐	☐	☐	☐ Correct as needed ☐ Note:
58. Is the fire surface height a minimum of 9" above the ground/floor?	☐	☐	☐	☐ Construct or renovate pits to meet clearances ☐ Note:
59. Are the slopes around fire pits not more than 1:50?	☐	☐	☐	☐ Construct or renovate pits to meet clearances ☐ Note:
Cooking Surfaces, Grills, Pedestal Grills[2]	**n/a**	**Yes**	**No**	**Cooking Surfaces, Grills, Pedestal Grills**
☒ Check here if section does not apply to this park and move to next section.				
60. Are accessible cooking features dispersed throughout the area and among the types provided?	☐	☐	☐	☐ Evenly disperse cooking features ☐ Note:
61. Are accessible cooking feature surfaces installed between 15 inches and 34 inches above the ground/floor?	☐	☐	☐	☐ Install as required ☐ Note:
62. Do operating controls and mechanisms comply with current ADAAG 4.27.1 (General) 4.27.2 (Clear Floor Space and 4.27.3 (Height)?	☐	☐	☐	☐ Install as required ☐ Note:
Fixed Trash/Recycling Containers	**n/a**	**Yes**	**No**	**Fixed Trash/Recycling Containers**
☒ Check here if section does not apply to this park and move to next section.				
63. Are trash and recycling containers accessible and do they comply with ADAAG 4.27?	☐	☐	☐	☐ Replace as needed ☐ Note:
Overlooks/Viewing Areas	**n/a**	**Yes**	**No**	**Overlooks/Viewing Areas**
☒ Check here if section does not apply to this park and move to next section.				
64. Are all viewing areas on an accessible route?	☐	☐	☐	☐ Install accessible paths as needed ☐ Note:
65. Are all viewing areas constructed to provide an unobstructed view?	☐	☐	☐	☐ Repair as needed ☐ Note:
66. Is there at least one maneuvering space that complies with ADAAG 4.2.3?	☐	☐	☐	☐ Repair as needed ☐ Note:
67. Is the ground surface firm and stable?	☐	☐	☐	☐ Repair as needed

[2] Where there is only one cooking surface, grill or pedestal grill in a provided picnic area, it shall be accessible. Where multiple cooking features are provided in a picnic area, 50 percent, but no less than 2 shall be accessible.

				☐ Note:
68. Is the maneuvering space less than or equal to 1:50? (1:33 maximum allowed for drainage)	☐	☐	☐	☐ Repair as needed ☐ Note:
Telescopes/Periscopes	**n/a**	**Yes**	**No**	**Telescopes/Periscopes**
☒ Check here if section does not apply to this park and move to next section.				
69. Are at least 20%, but not less than one, telescope or periscope that complies with ADAAG 4.27?	☐	☐	☐	☐ Repair as needed ☐ Note:
70. Are the eye pieces usable from a seated position?	☐	☐	☐	☐ Repair as needed ☐ Note:
71. Is the ground surface firm and stable?	☐	☐	☐	☐ Repair as needed ☐ Note:
72. Is the maneuvering space less than or equal to 1:50? (1:33 maximum allowed for drainage)	☐	☐	☐	☐ Repair as needed ☐ Note:
Benches	**n/a**	**Yes**	**No**	**Benches**
☐ Check here if section does not apply to this park and move to next section.				
73. Where multiple benches are provided, are at least 50% consistent with this section?	☐	☐	☒	☐ Repair as needed ☐ Note: **1 of 35 has W/C space, all located in grass**
74. Are accessible benches dispersed evenly throughout the park?	☐	☐	☒	☐ Disperse benches evenly throughout the park ☐ Note: just at play area
75. Of the accessible benches that are provided, do at least 50% of those benches have armrests consistent with ADAAG 4.26.3?	☐	☐	☒	☐ Repair as needed ☒ Note: **2 benches have armrests but located in grass**
76. Are the front edges of accessible benches between 17 and 19 inches maximum above the ground/floor?	☐	☐	☒	☐ Repair as needed ☐ Note: **Heights vary**
77. Are floor spaces adjacent to benches consistent with ADAAG 4.2.4?	☐	☐	☒	☐ Repair as needed ☐ Note:
78. Is the ground/floor surface around the accessible benches firm and stable?	☐	☐	☒	☐ Repair as needed ☐ Note:
79. Do all accessible benches have back support the full length of the bench?	☐	☒	☐	☐ Repair as needed ☐ Note:
Playground Equipment Accessibility	**n/a**	**Yes**	**No**	**Playground Equipment Accessibility**
☐ Check here if section does not apply to this park and move to next section.				
80. Is there at least one of each play component on an accessible route[3]?	☐	☐	☒	☐ Expand existing accessible routes as needed ☐ Construct accessible routes ☒ Note: **No ramp into play area**
81. Is there at least one of each ground-level play component on an accessible route?	☐	☐	☒	☐ Expand existing accessible routes as needed ☒ Construct accessible routes ☐ Note:
82. Are the play components integrated for	☐	☐	☒	☐ Ensure play components on accessible

[3] Different types of play components are based on the general experience provided by the play component. Different types include, but are no limited to, rocking, swinging, climbing, spinning and sliding. Components may be elevated or at or below ground level.

use by all children; including those with disabilities?				routes can be used by all children ☐ Note:
Trails	**n/a**	**Yes**	**No**	**Trails**
☐ Check here if section does not apply to this park and move to next section.				
83. Is the clear width of the trail 36 inches?	☐	☒	☐	☐ Renovate as required ☐ Construct all new trails to code ☐ Note:
84. Are openings in the trail less than ½ inch? *Note: (Board slat spaces, etc. – Elongated openings should be placed so that the long dimension is perpendicular or diagonal to the dominate direction of travel.)*	☐	☒	☐	☐ Renovate as required ☐ Construct all new trails to code ☐ Note:
85. Is the trail free of constructed or natural barriers?	☐	☒	☐	☐ Remove as needed ☐ Note:
86. Are all overhead hazards maintained at a height that is sufficient for all expected users of the trail? (Remember, Objects that protrude into a pathway at a height greater than 27" are difficult for the blind or persons with visual disabilities who use canes to detect.)	☐	☒	☐	☐ Renovate as required ☐ Construct all new trails to code ☐ Note:
87. Is there a segment in the trail that has a 10% grade for more than 30 feet?	☐	☐	☒	☐ Construct level rest interval[4] ☐ Note:
88. Are all cross slopes a maximum of 3%?	☐	☒	☐	☐ Renovate as required ☐ Construct all new trails to code ☐ Note:
89. Are all tread obstacles a maximum of 1"?	☐	☒	☐	☐ Renovate as required ☐ Construct all new trails to code ☐ Note:
90. Are passing spaces (6" x 60") provided at maximum intervals of 200 ft. whenever the clear tread width is less then 60"?	☒	☐	☐	☐ Renovate as required ☐ Construct all new trails to code ☐ Note:
91. Does the trail have or require edge protection?	☐	☐	☒	☐ Renovate as required – Where provided, edge protection should be a minimum of 3". ☐ Construct all new trails to code ☐ Note:
92. Does the trail have signs that clearly indicate the type of use, rules and difficult conditions for the trail?	☐	☐	☒	☐ Renovate as required ☐ Construct all new trails to code ☐ Note:
93. Are there signs that warn users that changes in trail level or tread obstacles could not be removed?	☐	☐	☒	☐ Renovate as required ☐ Construct all new trails to code ☐ Note:
94. Are there detectable warnings anywhere a route crosses a traffic way?	☐	☐	☒	☐ Repair as needed ☐ Note:
Shooting Facilities	**n/a**	**Yes**	**No**	**Shooting Facilities**
☒ Check here if section does not apply to this park and move to next section.				
95. Does the English Pit range have 60-inch diameter space with slopes not steeper	☐	☐	☐	☐ Renovate as needed ☐ Install accessible seating area

[4] Resting intervals must be 60" minimum on length and at least as wide as the widest portion of the trail segment leading to the resting interval with a cross slope that does not exceed 3%.

than 1:48 so a wheelchair can turn around?				☐ Note
96. Do the firing benches have a wheelchair accessible area with a bench between 27 and 34 inches with a minimum of 19" leg space?	☐	☐	☐	☐ Renovate as needed ☐ Install accessible seating area ☐ Note
97. If fixed firing positions are provided, at least 5% but not less than one of each type of firing position, must be served by an accessible route. Does English Pit have an accessible route?	☐	☐	☐	☐ Renovate as needed ☐ Install accessible route ☐ Note
98. Does the park have accessible routes to all target impact areas?	☐	☐	☐	☐ Expand existing accessible routes as needed ☐ Construct accessible routes ☐ Note:
Aquatic Recreation Facilities	**n/a**	**Yes**	**No**	**Aquatic Recreation Facilities**
☒ Check here if section does not apply to this park and move to next section.				
99. Is there an accessible route (36" wide) over beach areas that allow access to the water's edge?	☐	☐	☐	☐ Renovate as needed ☐ Install accessible route ☐ Note
100. Are there accessible routes with handrails that lead into designated swim areas such as ponds, lakes, etc.	☐	☐	☐	☐ Renovate as needed ☐ Install accessible route ☐ Note
Fishing piers and Platforms	**n/a**	**Yes**	**No**	**Fishing piers and Platforms**
☒ Check here if section does not apply to this park and move to next section.				
101. Does this park have a facility specifically designed and constructed for fishing?	☐	☐	☐	(Structures that were not built specifically for fishing do not need to meet ADAAG guidelines. Structures designed as fishing piers or platforms, must have an accessible route.)
102. Does the park have a gangway serving the fishing pier or platform?	☐	☐	☐	☐ Install a gangway platform – Gangway 1:12 maximum slope or at least 30 feet long. ☐ Renovate existing platform to meet code (Check specific building codes) ☐ Note
103. Does the gangway have a transition plate to the pier or platform that meets code?	☐	☐	☐	☐ Install a transition plate[5] ☐ Adjust existing transition plate to meet code ☐ Note
104. Does the gangway have handrails?	☐	☐	☐	☐ Install handrail to meet code ☐ Ensure existing rails meet code ☐ Note
105. Does the fishing pier or platform have railings, guards or handrails[6]?	☐	☐	☐	☐ Install as needed ☐ Renovate existing structure to meet code ☐ Note

[5] Gangways are not required to have to have landings at the end, if transition plates are provided. If the slope of the transition plate is greater that 1: 20 (5%), the transition plates must have a landing at the end of the transition plate not connected to the gangway and must comply with other ramp requirements.

[6] Where railings, guards or handrails are provided on a fishing pier or platform, at least 25 % of the rails must be 34 inches or less in height above the ground or dock so accommodate a person in a wheelchair. These railings must be dispersed as equally as possible to all areas of the fishing pier.

106. Does the fishing pier or platform have edge protection[i]?	☐	☐	☐	☐ Install ☐ Renovate existing edge protection ☐ Note
107. Does the fishing pier or platform have clear floor or ground space[ii]?	☐	☐	☐	☐ Install ☐ Renovate existing edge protection ☐ Note
108. Does the fishing pier or platform have sufficient turning space[iii]?	☐	☐	☐	☐ Install ☐ Renovate existing edge protection ☐ Note
Boating Facilities	**n/a**	**Yes**	**No**	**Boating Facilities**
☒ Check here if section does not apply to this park and move to next section.				
109. Is there an accessible route to the boating facilities?	☐	☐	☐	☐ Install ☐ Renovate existing route ☐ Note
110. Does the gangway to the dock or floating dock deigned to provide for a maximum 1:12 (8.33%) slope ? *Note: Not required to be longer than 80 feet. (Elevators may be used in lieu of gangways) In smaller facilities with less than 25 boat slips, the slope of the gangway may exceed 1:12, if the gangway is at least 30 feet long.*	☐	☐	☐	☐ Install ☐ Renovate existing route ☐ Note
111. Does the gangway have a transition plate to the pier or platform that meets code[iv]?	☐	☐	☐	☐ Install a transition plate ☐ Adjust existing transition plate to meet code ☐ Note

<table>
<tr><td>112. Where boat slips[7] are provided, does the number of accessible slips[8] comply with the table to the right?
Note: If boat slips at a facility are not identified or demarcated by length, each 40 feet of boat slip edge along the perimeter of a pier will be counted as one boat slip</td><td>☐</td><td>☐</td><td>☐</td><td>
<table>
<tr><th colspan="2">Number of Accessible Boat Slips Required</th></tr>
<tr><td>Total Slips in Facility</td><td>Minimum Accessible Slips</td></tr>
<tr><td>1-25</td><td>1</td></tr>
<tr><td>26-50</td><td>2</td></tr>
<tr><td>50-100</td><td>3</td></tr>
<tr><td>101-150</td><td>4</td></tr>
</table>
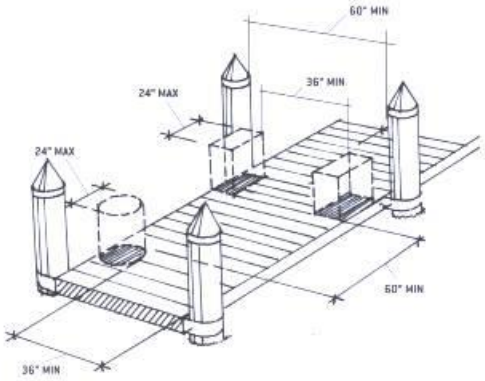

PIER CLEARANCE SPACE REDUCTION
</td></tr>
<tr><td>If the facility only has a boarding pier (see footnote # 9) at least 5% but not less than, must comply with these guidelines. The entire length of accessible boarding piers must comply with the same provisions that apply to slips.

113. Does this facility meet this regulation?</td><td>☐</td><td>☐</td><td>☐</td><td>☐ Install
☐ Renovate boarding pier
☐ Note</td></tr>
<tr><td>114. Is this facility compromised only of a boat launch with no boarding ramp or pier?</td><td>☐</td><td>☐</td><td>☐</td><td>If yes, there are no specific provisions that address access to launch ramps without boarding piers.</td></tr>
</table>

[7] A boat slip is the portion of a pier, main pier, finger pier, or float where a boat is berthed or moored, or used for embarking or disembarking. Boarding piers that are not part of a boat launch ramp are classified as “boat slips” for the purpose of this survey.

[8] Accessible boat slips must have clear pier space at least 60 inches wide and as long as the slip. Every 10 feet of linear pier edge serving the accessible slips must have at least one continuous clear opening that is at least 60 inches wide. The width of the clear pier space may be 36 inches wide for a length of 24 inches, as long as multiple 36-inch segments are separated by segments that are 60 inches minimum clear in width and 60 inches minimum clear in length, and the clear openings are at least 60 inches deep. Edge protection is not required

Item Number	Notes
	Detectible warning strips lacking at SW access trail entry
	Detectible warning strips not present along Stewart Ave access points.
	Detectible warning strips lacking at east parking lot & school crossing
	MUtt mitt dispenser mounted too high (51")
	H/C parking signs too low
	Step at gazebo = barrier
	No ramp at playground

4.2.3* Wheelchair Turning Space. The space required for a wheelchair to make a 180-degree turn is a clear space of 60 in (1525 mm) diameter (see Fig. 3(a)) or a T-shaped space (see Fig. 3(b)). Appendix Note

4.2.4* Clear Floor or Ground Space for Wheelchairs.

4.2.4.1 Size and Approach. The minimum clear floor or ground space required to accommodate a single, stationary wheelchair and occupant is 30 in by 48 in (760 mm by 1220 mm) (see Fig. 4(a)). The minimum clear floor or ground space for wheelchairs may be positioned for forward or parallel approach to an object (see Fig. 4(b) and (c)). Clear floor or ground space for wheelchairs may be part of the knee space required under some objects.

4.2.4.2 Relationship of Maneuvering Clearance to Wheelchair Spaces. One full unobstructed side of the clear floor or ground space for a wheelchair shall adjoin or overlap an accessible route or adjoin another wheelchair clear floor space. If a clear floor space is located in an alcove or otherwise confined on all or part of three sides, additional maneuvering clearances shall be provided as shown in Fig. 4(d) and (e).

4.2.4.3 Surfaces for Wheelchair Spaces. Clear floor or ground spaces for wheelchairs shall comply with 4.5. Appendix Note

4.16.3* Height. The height of water closets shall be 17 in to 19 in (430 mm to 485 mm), measured to the top of the toilet seat (see Fig. 29(b)). Seats shall not be sprung to return to a lifted position. Appendix Note

4.16.4* Grab Bars. Grab bars for water closets not located in stalls shall comply with 4.26 and Fig. 29. The grab bar behind the water closet shall be 36 in (915 mm) minimum. Appendix Note

4.26.3 Structural Strength. The structural strength of grab bars, tub and shower seats, fasteners, and mounting devices shall meet the following specification:

(1) Bending stress in a grab bar or seat induced by the maximum bending moment from the application of 250 lbf (1112N) shall be less than the allowable stress for the material of the grab bar or seat.

(2) Shear stress induced in a grab bar or seat by the application of 250 lbf (1112N) shall be less than the allowable shear stress for the material of the grab bar or seat. If the connection between the grab bar or seat and its mounting bracket or other support is considered to be fully restrained, then direct and torsional shear stresses shall be totaled for the combined shear stress, which shall not exceed the allowable shear stress.

(3) Shear force induced in a fastener or mounting device from the application of 250 lbf (1112N) shall be less than the allowable lateral load of either the fastener or mounting device or the supporting structure, whichever is the smaller allowable load.

(4) Tensile force induced in a fastener by a direct tension force of 250 lbf (1112N) plus the maximum moment from the application of 250 lbf (1112N) shall be less than the allowable withdrawal load between the fastener and the supporting structure.

(5) Grab bars shall not rotate within their fittings.

4.27 Controls and Operating Mechanisms.

4.27.1 General. Controls and operating mechanisms required to be accessible by 4.1 shall comply with 4.27.

4.27.2 Clear Floor Space. Clear floor space complying with 4.2.4 that allows a forward or a parallel approach by a person using a wheelchair shall be provided at controls, dispensers, receptacles, and other operable equipment.

4.27.3* Height. The highest operable part of controls, dispensers, receptacles, and other operable equipment shall be placed within at least one of the reach ranges specified in 4.2.5 and 4.2.6. Electrical and communications system receptacles on walls shall be mounted no less than 15 in (380 mm) above the floor. Appendix Note

EXCEPTION: These requirements do not apply where the use of special equipment dictates otherwise or where electrical and communications systems receptacles are not normally intended for use by building occupants.

4.27.4 Operation. Controls and operating mechanisms shall be operable with one hand and shall not require tight grasping, pinching, or twisting of the wrist. The force required to activate controls shall be no greater than 5 lbf (22.2 N).

---

[i] Where railings, guards or handrails are provided, edge protection must be provided and extended a minimum of 2 inches above the ground or deck surface. Edge protection is not required where a railing, guardrail or handrail is provided, if the deck surface extends a minimum of 12 inches beyond the inside face of the railing.

[ii] At least one clear floor or ground space (30 inches by 48 inches) must be provided at each location that has a railing height of 34 inches maximum. If there is no railing, at least one clear space must be provided on a pier or platform.

[iii] Fishing piers and platforms must have at least one turning area, either 60-inch turning space or a T-shaped space to allow a person using a mobility device or wheelchair to make a 180-degree turn.

[iv] Gangways are not required to have to have landings at the end, if transition plates are provided. If the slope of the transition plate is greater that 1: 20 (5%), the transition plates must have a landing at the end of the transition plate not connected to the gangway and must comply with other ramp requirements.

ADA Checklist for Existing Facilities

Priority 1 – Approach & Entrance

Based on the 2010 ADA Standards for Accessible Design

Project: Medford Parks ADA Transition Plan

Building

Location : Fitchner-Mainwaring Park

Date March 3, 2016

Surveyors: Jean Akers

Contact Information

An accessible route from site arrival points and an accessible entrance should be provided for everyone.

This checklist was produced by the New England ADA Center, a project of the Institute for Human Centered Design and a member of the ADA National Network. This checklist was developed under a grant from the Department of Education, NIDRR grant number H133A060092-09A. However the contents do not necessarily represent the policy of the Department of Education, and you should not assume endorsement by the Federal Government.

Questions or comments on the checklist contact the New England ADA Center at 617-695-0085 voice/tty or ADAinfo@NewEnglandADA.org

For the full set of checklists, including the checklists for recreation facilities visit www.ADAchecklist.org.

Priority 1 – Approach & Entrance				**Comments**	**Possible Solutions**
1.1	Is there at least one route from site arrival points (parking, passenger loading zones, public sidewalks and public transportation stops) that does not require the use of stairs? [See 2010 ADA Standards for Accessible Design – 206.2.1]	☒ Yes ☐ No If yes, location of route:		Photo #:	• Add a ramp • Regrade to 1:20 maximum slope • Add a lift if site constraints prevent other solutions
Parking Accessible parking spaces should be identified by size, access aisle and signage.					
1.2	If parking is provided for the public, are an adequate number of accessible spaces provided? [208.2]	☐ Yes ☒ No Total #:60 Accessible #: 2 (east lot) (5 of 79 at south lot)	**Total Spaces** / **Accessible Spaces** 1 - 25 / 1 26 - 50 / 2 51 - 75 / 3 76 - 100 / 4 100+ see 2010 Standards 208.2	East lot should contain an additional H/C space Photo #:	• Reconfigure by repainting lines • •
1.3	Of the accessible spaces, is at least one a van accessible space?* [208.2.4]	☒ Yes ☐ No	*For every 6 or fraction of 6 parking spaces required by the table above, at least 1 should be a van accessible space.	Photo #:	* If constructed before 3/15/2012, parking is compliant if at least 1 in every 8 accessible spaces is van accessible • Reconfigure by repainting lines

1.4	Are accessible spaces at least 8 feet wide with an access aisle at least 5 feet wide? [502.2, 502.3] Note: Two spaces may share an access aisle. Check state/local requirements; some specify that each space have its own aisle.	☒ Yes ☐ No Measurement: 9' space/8' aisle	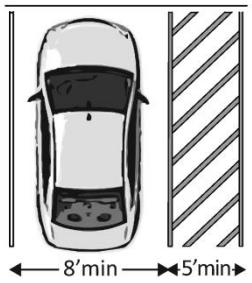	Photo #:	• Reconfigure by repainting lines • •
1.5	Is the van accessible space: At least 11 feet wide with an access aisle at least 5 feet wide? Or At least 8 feet wide with an access aisle at least 8 feet wide? [502.2]	☐ Yes ☒ No Measurement: ☒ Yes ☐ No Measurement:	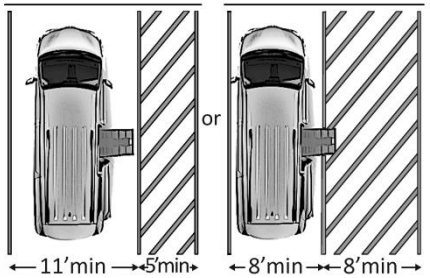	Photo #:	• Reconfigure to provide van-accessible space(s) • •
1.6	Is at least 98 inches of vertical clearance provided for the van accessible space? [502.5]	☒ Yes ☐ No Measurement:	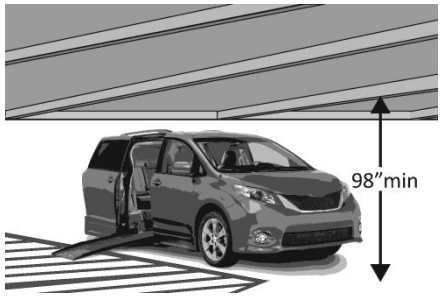	Photo #:	• Reconfigure to provide van-accessible space(s) • •

1.7	Are the access aisles marked so as to discourage parking in them? [502.3.3] Note: The marking method and color may be addressed by state/local requirements.	☒ Yes ☐ No	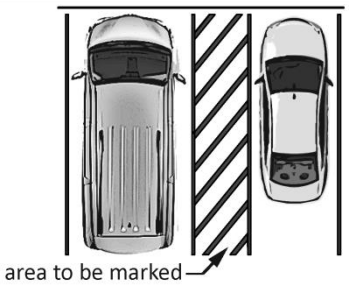	Paint in fading & needs restriping Photo #:	• Mark access aisles • Restripe aisles •
1.8	Is the slope of the accessible parking spaces and access aisles no steeper than 1:48 in all directions? [502.4]	☐ Yes ☒ No Measurement: 1 space=2.8% van space=3%		Photo #:	• Regrade surface • •
1.9	Do the access aisles adjoin an accessible route? [502.3]	☒ Yes ☒ No	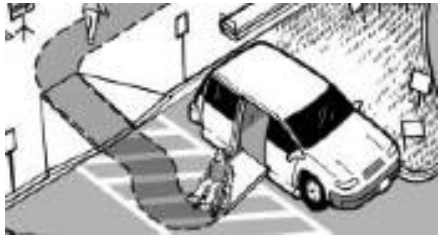	One space is adjoining in east lot; other space is not. Photo #:	• Create accessible route • Relocate accessible space •
1.10	Are accessible spaces identified with a sign that includes the International Symbol of Accessibility? Is the bottom of the sign at least 60 inches above the ground? [502.6] Note: The International Symbol of Accessibility is not required on the ground.	☒ Yes ☐ No ☐ Yes ☒ No Measurement: 32.5”	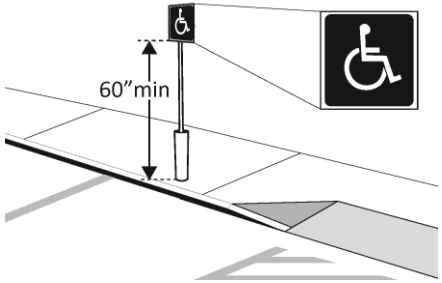	One sign is completely faded and needs to be replaced. All signs mounted too low.	• Install new signs at required height • •

1.11	Are there signs reading "van accessible" at van accessible spaces? [502.6]	☐ Yes ☒ No		Photo #:	• Install signs • •
1.12	Of the total parking spaces, are the accessible spaces located on the closest accessible route to the accessible entrance(s)? [208.3.1] Note: If parking serves multiple entrances, accessible parking should be dispersed.	☒ Yes ☒ No		East lot has one adjoining entrance and another that is separated. Photo #:	• Reconfigure spaces • •
Exterior Accessible Route					
1.13	Is the route stable, firm and slip-resistant? [302.1]	☒ Yes ☐ No		Photo #:	• Repair uneven paving • Fill small bumps and breaks with patches • Replace gravel with asphalt or other surface
1.14	Is the route at least 36 inches wide? [403.5.1]	☒ Yes ☐ No Measurement:	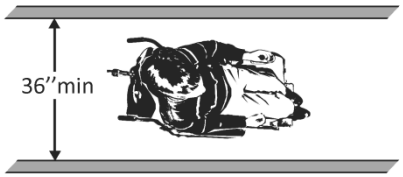		• Change or move landscaping, furnishings or other items • Widen route •

	Note: The accessible route can narrow to 32 inches min. for a max. of 24 inches. These narrower portions of the route must be at least 48 inches from each other.		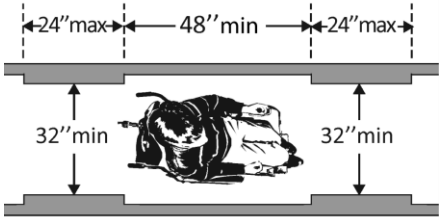 Photo #:	
1.15	If the route is greater than 200 feet in length and less than 60 inches wide, is there a passing space no less than 60 x 60 inches? [403.5.3]	☐ Yes ☐ No Measurement:	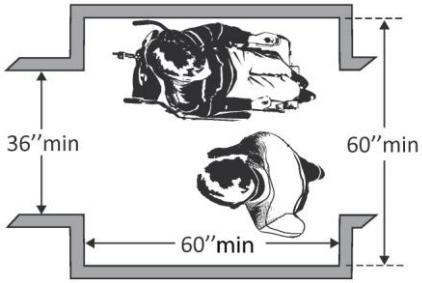 Photo #:	• Widen route for passing space • •
1.16	If there are grates or openings on the route, are the openings no larger than ½ inches? Is the long dimension perpendicular to the dominant direction of travel? [302.3]	☐ Yes ☐ No Measurement: ☐ Yes ☐ No	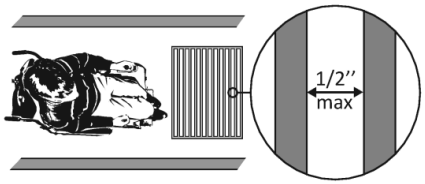 Photo #:	• Replace or move grate • •

ADA Compliance Program

MEDFORD PARKS AND RECREATION DEPARTMENT

ADA ACCESSIBILITY SURVEY FOR PARK FACILITIES

Date: **March 2, 2016** **Estimated Cost:**

Facility: **Hawthorne Park** **Department Notified:**

Survey by: **Jean Akers** **Date of Notification:**

Check all applicable building codes and ADAAG publications prior to any renovation or construction. This survey is only a guideline.

ITEM				RECOMMENDATIONS
Accessible Routes[1]	**n/a**	**Yes**	**No**	**Accessible Routes**
☐ Check here if section does not apply to this park and move to next section.				
1. Does the park have accessible routes to all accessible facilities within the park?	☐	☐	☒	☐ Expand existing accessible routes as needed ☐ Construct accessible routes ☐ Note: **Concrete lip at dog park gates**
2. Where court sports are provided (i.e. tennis, basketball, and volleyball) are there accessible routes to each court? (Routes must connect both sides of the court)	☐	☒	☐	☐ Expand existing accessible routes as needed ☐ Construct accessible routes ☐ Note:
3. Are there accessible routes to any and all animal containment areas?	☐	☐	☒	☐ Expand existing accessible routes as needed ☐ Construct accessible routes ☐ Note**: >1" obstruction at gates**
4. Are there detectable warnings anywhere a route crosses a traffic way?	☐	☐	☒	☐ Repair as needed ☐ Note: **Missing at south end of park**
ITEM				**RECOMMENDATIONS**
Parking and Drop-off Areas	**n/a**	**Yes**	**No**	**Parking and Drop-off Areas**
☐ Check here if section does not apply to this park and move to next section.				
5. Are an adequate number of accessible parking spaces available? The table below gives the ADAAG requirement for new construction and alterations (for lots with more than 100 spaces refer to ADAAG). Accessible Spaces per Overall spaces	☐	☐	☒	☒ Reconfigure a reasonable number of spaces by repainting stripes. ☐ Construct accessible routes ☒ Note: **South parking lot needs additional H/C space**

Total Spaces	Accessible Spaces Required
South lot=60	**2 spaces**
1 to 25	1 space
26 to 50	2 spaces
51 to 75	3 spaces
76 to 100	4 spaces
North lot = 65	**4 spaces**

[1] Accessible routes must comply with ADAAG provisions for the location, width (minimum 36 inches) passing space, head room, surface, slope (Maximum 1:12 (or 8.33%). Accessible routes must connect all accessible elements within the facility. Accessible routes must be stable, firm and slip resistant. There is no requirement to change the surface of a playing field to an accessible surface.

6. Are an adequate number of van accessible spaces provided? At least 1 of every 8 accessible spaces must be van-accessible (with a minimum of 1 van-accessible space in all cases.)	☐	☒	☐	☐ Reconfigure to provide van-accessible space(s).
7. Are the access aisles part of the accessible route?	☐	☒	☐	☐ Add curb ramps. ☐ Reconstruct sidewalk
8. Are the accessible spaces closest to the accessible entrance?	☐	☒	☐	☐ Reconfigure spaces.
9. Are accessible spaces marked with and International Symbol of Accessibility? Are there signs reading "Van Accessible" at van spaces?	☐	☒	☐	☐ Add signs, placed so that they are not obstructed by cars.
10. Is there an enforcement procedure to ensure that accessible parking is used only by those who need it?	☒	☐	☐	☐ Implement a policy to check periodically for violators and report them to the proper authorities.
Team Player Seating Areas	**n/a**	**Yes**	**No**	**Team Player Seating Areas**
☒ Check here if section does not apply to this park and move to next section.				
11. Do fixed team or player seating areas contain the required number of wheelchair spaces and companion seats required by ADAAG?	☐	☐	☐	☐ Renovate as needed ☐ Install accessible seating area ☐ Note
Restrooms	**n/a**	**Yes**	**No**	**Restrooms**
☐ Check here if section does not apply to this park and move to next section.				
12. If rest rooms are available to the public, is at least one rest room (either one for each sex, or unisex) fully accessible?	☐	☒	☐	☐ Reconfigure rest room. ☐ Combine rest rooms to create one unisex accessible rest room. ☐ Note:
13. Are there signs at inaccessible rest rooms that give directions to accessible ones?	☒	☐	☐	☐ Install accessible signs. ☐ Note:
14. Is there tactile signage identifying rest rooms? *Note: Mount signs on the wall, on the latch side of the door, complying with the permanent signage.*	☐	☒	☐	☐ Add accessible signage, placed to the side of the door, 60 inches to centerline (not on the door itself). ☐ If symbols are used, add supplementary verbal signage. ☐ Note:
15. Are pictograms or symbols used to identify rest rooms, and, if used, are raised characters and braille included below?	☐	☒	☐	☐ If symbols are used, add supplementary verbal signage with raised characters and braille below pictogram symbol. ☐ Note:
16. Is the doorway at least 32 inches clear?	☐	☒	☐	☐ Install offset (swing-clear) hinges. ☐ Widen the doorway. ☐ Note:
17. Are doors equipped with accessible handles (operable with a closed fist), 48 inches high or less?	☐	☒	☐	☐ Lower handles. ☐ Replace knobs or latches with lever or loop handles. ☐ Add lever extensions. ☐ Install power-assisted or automatic door openers. ☐ Note:

18. Can doors be opened easily (5 lbf maximum force)?	☐	☒	☐	☐ Adjust or replace closers. ☐ Install lighter doors. ☐ Install power-assisted or automatic door openers. ☐ Note:
19. Does the entry configuration provide adequate maneuvering space for a person using a wheelchair? *Note: A person using a wheelchair needs 36 inches of clear width for forward movement, and a 5-foot diameter clear space or a T-shaped space to make turns. A minimum distance of 48 inches clear of the door swing is needed between the two doors of an entry vestibule.*	☐	☒	☐	☐ Rearrange furnishings such as chairs and trash cans. ☐ Remove inner door if there is a vestibule with two doors. ☐ Move or remove obstructing partitions. ☐ Note:
20. Is there a 36-inch-wide path to all fixtures?	☐	☐	☐	☐ Remove obstructions. ☐ Note:
21. Is the stall door operable with a closed fist, inside and out?	☐	☐	☐	☐ Replace inaccessible knobs with lever or loop handles. ☐ Add lever extensions. ☐ Note:
22. Is there a wheelchair-accessible stall that has an area of at least 5 feet by 5 feet, clear of the door swing, OR is there a stall that is less accessible but that provides greater access than a typical stall (either 36 by 69 inches or 48 by 69 inches)?	☐	☐	☐	☐ Move or remove partitions. ☐ Reverse the door swing if it is safe to do so. ☐ Note:
23. In the accessible stall, are there grab bars behind and on the side wall nearest to the toilet?	☐	☐	☐	☐ Add grab bars. ☐ Note:
24. Is the toilet seat 17 to 19 inches high?	☐	☐	☐	☐ Add raised seat. ☐ Note:
25. Does one lavatory have a 30-inch-wide by 48-inch-deep clear space in front? *Note: A maximum of 19 inches of the required depth may be under the lavatory.*	☐	☐	☐	☐ Rearrange furnishings. ☐ Replace lavatory. ☐ Remove or alter cabinetry to provide space underneath. Make sure hot pipes are covered. ☐ Move a partition or wall. ☐ Note:
26. Is the lavatory rim no higher than 34 inches?	☐	☐	☐	☐ Adjust or replace lavatory. ☐ Note:
27. Is there at least 29 inches from the floor to the bottom of the lavatory apron? (Excluding pipes)?	☐	☐	☐	☐ Adjust or replace lavatory. ☐ Note:
28. Can the faucet be operated with one closed fist?	☐	☐	☐	☐ Replace faucet handles with paddle type. ☐ Note:
29. Are soap and other dispensers and hand dryers within reach ranges (see page 7) and usable with one closed fist?	☐	☐	☐	☐ Lower dispensers. ☐ Replace with or provide additional accessible dispensers. ☐ Note:
30. Is the mirror mounted with the bottom edge of the reflecting surface 40 inches high or lower?	☐	☐	☐	☐ Lower or tilt down the mirror. ☐ Add a larger mirror anywhere in the room. ☐ Note:
Pit Toilets	**n/a**	**Yes**	**No**	**Pit Toilets**
31.				

☒ Check here if section does not apply to this park and move to next section.				
32. Is there a clear space of 60 inches by 60 inches adjacent to the toilet?	☐	☐	☐	☐ Repair as needed ☐ Note:
33. Does the height of the pit toilet riser comply with ADAAG 4.16.3?	☐	☐	☐	☐ Repair as needed ☐ Note:
34. Is the maneuvering space less than or equal to 1:50? (1:33 maximum allowed for drainage)	☐	☐	☐	☐ Repair as needed ☐ Note:
35. If the pit toilet has walls, are grab bars installed consistent with ADAAG 4.16.4?	☐	☐	☐	☐ Repair as needed ☐ Note:
36. Is the surface adjacent to the pit toilet firm and stable?	☐	☐	☐	☐ Repair as needed ☐ Note:
Utilities	**n/a**	**Yes**	**No**	**Utilities**
☒ Check here if section does not apply to this park and move to next section.				
37. Is the maneuvering space less than or equal to 1:50? (1:33 maximum allowed for drainage)	☐	☐	☐	☐ Repair as needed ☐ Note:
38. Is the surface adjacent to the utility firm and stable?	☐	☐	☐	☐ Repair as needed ☐ Note:
39. Are fixed water spouts located 28 inches minimum to 36 inches maximum above the ground or floor space?	☐	☐	☐	☐ Repair as needed ☐ Note:
40. Is the maneuvering space less than or equal to 1:50? (1:33 maximum allowed for drainage)	☐	☐	☐	☐ Repair as needed ☐ Note:
Drinking Fountains	**n/a**	**Yes**	**No**	**Drinking Fountains**
☐ Check here if section does not apply to this park and move to next section.				
41. Is there at least one fountain with clear floor space of at least 30 by 48 inches in front?	☐	☒	☐	☐ Clear more room by rearranging or removing furnishings. ☐ Note:
42. Is there one fountain with its spout no higher than 36 inches from the ground, and another with a standard height spout (or a single "hi-lo" fountain)?	☐	☒	☐	☐ Provide cup dispensers for fountains with spouts that are too high. ☐ Provide accessible water cooler. ☐ Note:
43. Are controls mounted on the front or on the side near the front edge, and operable with one closed fist?	☐	☒	☐	☐ Replace the controls. ☐ Note:
44. Is each water fountain cane-detectable (located within 27 inches off the floor or protruding less than 4 inches from the wall, into the circulation path?	☐	☒	☐	☐ Place a planter or other cane-detectable barrier on each side at floor level. ☐ Note:
Telephones	**n/a**	**Yes**	**No**	**Telephones**
☒ Check here if section does not apply to this park and move to next section.				
45. If pay or public use phones are provided, is there clear floor space of at least 30 by 48 inches in front of at least one?	☐	☐	☐	☐ Move furnishings. ☐ Replace booth with open station. ☐ Note:
46. Is the highest operable part of the phone no higher than 48 inches (up to 54 inches if a side approach is possible)?	☐	☐	☐	☐ Lower telephone. ☐ Note:
47. Does the phone protrude no more than 4 inches into the circulation space?	☐	☐	☐	☐ Place a cane-detectable barrier on each side at floor level. ☐ Note:

48. Does the phone have push-button controls?	☐	☐	☐	☐ Contact phone company to install push-buttons. ☐ Note:
49. Is the phone hearing-aid compatible?	☐	☐	☐	☐ Contact phone company to replace with hearing-aid compatible phone. ☐ Note:
50. Is the phone adapted with volume control?	☐	☐	☐	☐ Contact the phone company to add volume control. ☐ Note:
51. Is the phone with volume control identified with appropriate signage?	☐	☐	☐	☐ Add signage. ☐ Note:
52. If there are four or more public phones in the building, is one of the phones equipped with a text telephone (TT or TDD)?	☐	☐	☐	☐ Install a text telephone. ☐ Have a portable text telephone available. ☐ Provide a shelf and outlet next to phone. ☐ Note:
53. Is the location of the text telephone identified by accessible signage bearing the International TDD Symbol?	☐	☐	☐	☐ Add signage. ☐ Note:

Directional and Informational Signage	**n/a**	**Yes**	**No**	**Directional and Informational Signage**
☐ Check here if section does not apply to this park and move to next section.				
54. If mounted about 80 inches, do they have letters at least 3 inches high, with high contrast, and non-glare finish?	☐	☐	☒	☒ Review requirements and replace signs as needed, meeting the requirements for character size, contrast, and finish. ☒ Note: Rules signs
55. Do directional and informational signs comply with legibility requirements? 56. (Building directories or temporary signs need not comply.)	☐	☐	☒	☐ Review requirements and replace signs as needed, meeting the requirements for character size, contrast, and finish. ☐ Note:

Seats, Tables and Counters	**n/a**	**Yes**	**No**	**Seats, Tables and Counters**
☐ Check here if section does not apply to this park and move to next section.				
50. Are the spaces for wheelchair seating distributed throughout? (Cover or uncovered gathering areas, bleachers)	☐	☐	☒	☐ Rearrange tables to allow room for wheelchairs in seating areas throughout the area. ☐ Remove some fixed seating. ☐ Note: **No seating in dog parks**
51. If picnic tables are provided, are at least 50% and no less than two of the tables, accessible?	☐	☐	☒	☐ Replace as needed ☐ Note: **only 2 tables w/ W/C spaces, out of 11 tables**
52. Are knee spaces at accessible picnic tables at least 27 inches high, 30 inches wide, and 19 inches deep?	☐	☒	☐	☐ Replace or raise tables. ☐ Note:
53. Are picnic tables spaced such that all areas of the table are accessible?	☐	☒	☐	☐ Rearrange tables to allow room for wheelchairs in seating areas throughout the area. ☐ Remove some fixed seating. ☐ Note:
54. At each type of cashier counter, is there a portion of the main counter that is no more than 36 inches high?	☒	☐	☐	☐ Provide a lower auxiliary counter or folding shelf. ☐ Arrange the counter and surrounding furnishings to create a space to hand items back and forth.

				☐ Note:
55. Is there a portion of food-ordering counters that is no more than 36 inches high, or is there space at the side for passing items to customers who have difficulty reaching over a high counter?	☒	☐	☐	☐ Lower section of counter. ☐ Arrange the counter and surrounding furnishings to create a space to pass items. ☐ Note:
Fire Rings	**n/a**	**Yes**	**No**	**Fire Rings**
☒ Check here if section does not apply to this park and move to next section.				
56. Do all fire rings have a clear space extending a minimum 48" deep by 48" wide at all usable portions of the ring?	☐	☐	☐	☐ Install clear spaces as needed ☐ Note:
57. Are the clear spaces around the fire pit on a firm and stable surface?	☐	☐	☐	☐ Correct as needed ☐ Note:
58. Is the fire surface height a minimum of 9" above the ground/floor?	☐	☐	☐	☐ Construct or renovate pits to meet clearances ☐ Note:
59. Are the slopes around fire pits not more than 1:50?	☐	☐	☐	☐ Construct or renovate pits to meet clearances ☐ Note:
Cooking Surfaces, Grills, Pedestal Grills[2]	**n/a**	**Yes**	**No**	**Cooking Surfaces, Grills, Pedestal Grills**
☒ Check here if section does not apply to this park and move to next section.				
60. Are accessible cooking features dispersed throughout the area and among the types provided?	☐	☐	☐	☐ Evenly disperse cooking features ☐ Note:
61. Are accessible cooking feature surfaces installed between 15 inches and 34 inches above the ground/floor?	☐	☐	☐	☐ Install as required ☐ Note:
62. Do operating controls and mechanisms comply with current ADAAG 4.27.1 (General) 4.27.2 (Clear Floor Space and 4.27.3 (Height)?	☐	☐	☐	☐ Install as required ☐ Note:
Fixed Trash/Recycling Containers	**n/a**	**Yes**	**No**	**Fixed Trash/Recycling Containers**
☐ Check here if section does not apply to this park and move to next section.				
63. Are trash and recycling containers accessible and do they comply with ADAAG 4.27?	☐	☒	☐	☐ Replace as needed ☐ Note:
Overlooks/Viewing Areas	**n/a**	**Yes**	**No**	**Overlooks/Viewing Areas**
☒ Check here if section does not apply to this park and move to next section.				
64. Are all viewing areas on an accessible route?	☐	☐	☐	☐ Install accessible paths as needed ☐ Note:
65. Are all viewing areas constructed to provide an unobstructed view?	☐	☐	☐	☐ Repair as needed ☐ Note:
66. Is there at least one maneuvering space that complies with ADAAG 4.2.3?	☐	☐	☐	☐ Repair as needed ☐ Note:
67. Is the ground surface firm and stable?	☐	☐	☐	☐ Repair as needed ☐ Note:
68. Is the maneuvering space less than or	☐	☐	☐	☐ Repair as needed

[2] Where there is only one cooking surface, grill or pedestal grill in a provided picnic area, it shall be accessible. Where multiple cooking features are provided in a picnic area, 50 percent, but no less than 2 shall be accessible.

equal to 1:50? (1:33 maximum allowed for drainage)				☐ Note:
Telescopes/Periscopes	**n/a**	**Yes**	**No**	**Telescopes/Periscopes**
☒ Check here if section does not apply to this park and move to next section.				
69. Are at least 20%, but not less than one, telescope or periscope that complies with ADAAG 4.27?	☐	☐	☐	☐ Repair as needed ☐ Note:
70. Are the eye pieces usable from a seated position?	☐	☐	☐	☐ Repair as needed ☐ Note:
71. Is the ground surface firm and stable?	☐	☐	☐	☐ Repair as needed ☐ Note:
72. Is the maneuvering space less than or equal to 1:50? (1:33 maximum allowed for drainage)	☐	☐	☐	☐ Repair as needed ☐ Note:
Benches	**n/a**	**Yes**	**No**	**Benches**
☐ Check here if section does not apply to this park and move to next section.				
73. Where multiple benches are provided, are at least 50% consistent with this section?	☐	☐	☒	☐ Repair as needed ☐ Note:
74. Are accessible benches dispersed evenly throughout the park?	☐	☐	☒	☐ Disperse benches evenly throughout the park ☐ Note:
75. Of the accessible benches that are provided, do at least 50% of those benches have armrests consistent with ADAAG 4.26.3?	☐	☐	☒	☐ Repair as needed ☐ Note:
76. Are the front edges of accessible benches between 17 and 19 inches maximum above the ground/floor?	☐	☒	☐	☐ Repair as needed ☐ Note:
77. Are floor spaces adjacent to benches consistent with ADAAG 4.2.4?	☐	☐	☒	☐ Repair as needed ☐ Note:
78. Is the ground/floor surface around the accessible benches firm and stable?	☐	☐	☒	☐ Repair as needed ☐ Note:
79. Do all accessible benches have back support the full length of the bench?	☐	☒	☐	☐ Repair as needed ☐ Note:
Playground Equipment Accessibility	**n/a**	**Yes**	**No**	**Playground Equipment Accessibility**
☐ Check here if section does not apply to this park and move to next section.				
80. Is there at least one of each play component on an accessible route[3]?	☐	☐	☒	☐ Expand existing accessible routes as needed ☒ Construct accessible routes ☐ Note: **Step creates barrier from walk to bark surface**
81. Is there at least one of each ground-level play component on an accessible route?	☐	☒	☐	☐ Expand existing accessible routes as needed ☐ Construct accessible routes ☐ Note:
82. Are the play components integrated for use by all children; including those with disabilities?	☐	☒	☐	☐ Ensure play components on accessible routes can be used by all children ☐ Note:

[3] Different types of play components are based on the general experience provided by the play component. Different types include, but are no limited to, rocking, swinging, climbing, spinning and sliding. Components may be elevated or at or below ground level.

Trails	n/a	Yes	No	Trails
☐ Check here if section does not apply to this park and move to next section.				
83. Is the clear width of the trail 36 inches?	☐	☒	☐	☐ Renovate as required ☐ Construct all new trails to code ☐ Note:
84. Are openings in the trail less than ½ inch? *Note: (Board slat spaces, etc. – Elongated openings should be placed so that the long dimension is perpendicular or diagonal to the dominate direction of travel.)*	☐	☐	☒	☐ Renovate as required ☐ Construct all new trails to code ☐ Note: **Pavement of trails in south end are broken up and cracked.**
85. Is the trail free of constructed or natural barriers?	☐	☒	☐	☐ Remove as needed ☐ Note:
86. Are all overhead hazards maintained at a height that is sufficient for all expected users of the trail? (Remember, Objects that protrude into a pathway at a height greater than 27" are difficult for the blind or persons with visual disabilities who use canes to detect.)	☐	☒	☐	☐ Renovate as required ☐ Construct all new trails to code ☐ Note:
87. Is there a segment in the trail that has a 10% grade for more than 30 feet?	☐	☐	☒	☐ Construct level rest interval[4] ☐ Note:
88. Are all cross slopes a maximum of 3%?	☐	☒	☐	☐ Renovate as required ☐ Construct all new trails to code ☐ Note:
89. Are all tread obstacles a maximum of 1"?	☐	☐	☒	☐ Renovate as required ☐ Construct all new trails to code ☐ Note: **Dog park gates have low curb.**
90. Are passing spaces (6" x 60") provided at maximum intervals of 200 ft. whenever the clear tread width is less then 60"?	☒	☐	☐	☐ Renovate as required ☐ Construct all new trails to code ☐ Note:
91. Does the trail have or require edge protection?	☐	☐	☒	☐ Renovate as required – Where provided, edge protection should be a minimum of 3". ☐ Construct all new trails to code ☐ Note:
92. Does the trail have signs that clearly indicate the type of use, rules and difficult conditions for the trail?	☐	☐	☒	☐ Renovate as required ☐ Construct all new trails to code ☐ Note:
93. Are there signs that warn users that changes in trail level or tread obstacles could not be removed?	☐	☐	☒	☐ Renovate as required ☐ Construct all new trails to code ☐ Note:
94. Are there detectable warnings anywhere a route crosses a traffic way?	☐	☐	☒	☐ Repair as needed ☐ Note: **Missing at south end of park**
Shooting Facilities	**n/a**	**Yes**	**No**	**Shooting Facilities**
☒ Check here if section does not apply to this park and move to next section.				
95. Does the English Pit range have 60-inch diameter space with slopes not steeper than 1:48 so a wheelchair can turn around?	☐	☐	☐	☐ Renovate as needed ☐ Install accessible seating area ☐ Note

[4] Resting intervals must be 60" minimum on length and at least as wide as the widest portion of the trail segment leading to the resting interval with a cross slope that does not exceed 3%.

96. Do the firing benches have a wheelchair accessible area with a bench between 27 and 34 inches with a minimum of 19" leg space?	☐	☐	☐	☐ Renovate as needed ☐ Install accessible seating area ☐ Note
97. If fixed firing positions are provided, at least 5% but not less than one of each type of firing position, must be served by an accessible route. Does English Pit have an accessible route?	☐	☐	☐	☐ Renovate as needed ☐ Install accessible route ☐ Note
98. Does the park have accessible routes to all target impact areas?	☐	☐	☐	☐ Expand existing accessible routes as needed ☐ Construct accessible routes ☐ Note:
Aquatic Recreation Facilities	**n/a**	**Yes**	**No**	**Aquatic Recreation Facilities**
☒ Check here if section does not apply to this park and move to next section.				
99. Is there an accessible route (36" wide) over beach areas that allow access to the water's edge?	☐	☐	☐	☐ Renovate as needed ☐ Install accessible route ☐ Note
100. Are there accessible routes with handrails that lead into designated swim areas such as ponds, lakes, etc.	☐	☐	☐	☐ Renovate as needed ☐ Install accessible route ☐ Note
Fishing piers and Platforms	**n/a**	**Yes**	**No**	**Fishing piers and Platforms**
☒ Check here if section does not apply to this park and move to next section.				
101. Does this park have a facility specifically designed and constructed for fishing?	☐	☐	☐	(Structures that were not built specifically for fishing do not need to meet ADAAG guidelines. Structures designed as fishing piers or platforms, must have an accessible route.)
102. Does the park have a gangway serving the fishing pier or platform?	☐	☐	☐	☐ Install a gangway platform – Gangway 1:12 maximum slope or at least 30 feet long. ☐ Renovate existing platform to meet code (Check specific building codes) ☐ Note
103. Does the gangway have a transition plate to the pier or platform that meets code?	☐	☐	☐	☐ Install a transition plate[5] ☐ Adjust existing transition plate to meet code ☐ Note
104. Does the gangway have handrails?	☐	☐	☐	☐ Install handrail to meet code ☐ Ensure existing rails meet code ☐ Note
105. Does the fishing pier or platform have railings, guards or handrails[6]?	☐	☐	☐	☐ Install as needed ☐ Renovate existing structure to meet code ☐ Note
106. Does the fishing pier or platform have edge protection[i]?	☐	☐	☐	☐ Install ☐ Renovate existing edge protection ☐ Note

[5] Gangways are not required to have to have landings at the end, if transition plates are provided. If the slope of the transition plate is greater that 1: 20 (5%), the transition plates must have a landing at the end of the transition plate not connected to the gangway and must comply with other ramp requirements.

[6] Where railings, guards or handrails are provided on a fishing pier or platform, at least 25 % of the rails must be 34 inches or less in height above the ground or dock so accommodate a person in a wheelchair. These railings must be dispersed as equally as possible to all areas of the fishing pier.

107. Does the fishing pier or platform have clear floor or ground space[ii]?	☐	☐	☐	☐ Install ☐ Renovate existing edge protection ☐ Note
108. Does the fishing pier or platform have sufficient turning space[iii]?	☐	☐	☐	☐ Install ☐ Renovate existing edge protection ☐ Note
Boating Facilities	**n/a**	**Yes**	**No**	**Boating Facilities**
☒ Check here if section does not apply to this park and move to next section.				
109. Is there an accessible route to the boating facilities?	☐	☐	☐	☐ Install ☐ Renovate existing route ☐ Note
110. Does the gangway to the dock or floating dock deigned to provide for a maximum 1:12 (8.33%) slope ? *Note: Not required to be longer than 80 feet. (Elevators may be used in lieu of gangways) In smaller facilities with less than 25 boat slips, the slope of the gangway may exceed 1:12, if the gangway is at least 30 feet long.*	☐	☐	☐	☐ Install ☐ Renovate existing route ☐ Note
111. Does the gangway have a transition plate to the pier or platform that meets code[iv]?	☐	☐	☐	☐ Install a transition plate ☐ Adjust existing transition plate to meet code ☐ Note

<table>
<tr><td>112. Where boat slips[7] are provided, does the number of accessible slips[8] comply with the table to the right?
Note: If boat slips at a facility are not identified or demarcated by length, each 40 feet of boat slip edge along the perimeter of a pier will be counted as one boat slip</td><td>☐</td><td>☐</td><td>☐</td><td>
<table>
<tr><th colspan="2">Number of Accessible Boat Slips Required</th></tr>
<tr><td>Total Slips in Facility</td><td>Minimum Accessible Slips</td></tr>
<tr><td>1-25</td><td>1</td></tr>
<tr><td>26-50</td><td>2</td></tr>
<tr><td>50-100</td><td>3</td></tr>
<tr><td>101-150</td><td>4</td></tr>
</table>
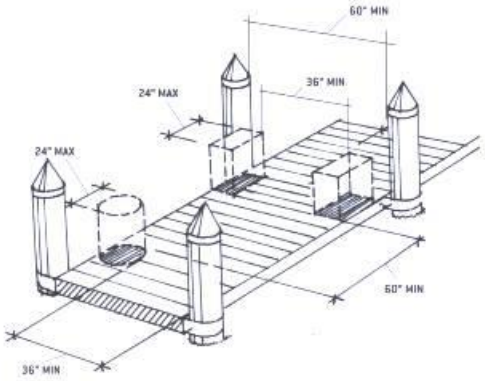

PIER CLEARANCE SPACE REDUCTION
</td></tr>
<tr><td>If the facility only has a boarding pier (see footnote # 9) at least 5% but not less than, must comply with these guidelines. The entire length of accessible boarding piers must comply with the same provisions that apply to slips.

113. Does this facility meet this regulation?</td><td>☐</td><td>☐</td><td>☐</td><td>☐ Install
☐ Renovate boarding pier
☐ Note</td></tr>
<tr><td>114. Is this facility compromised only of a boat launch with no boarding ramp or pier?</td><td>☐</td><td>☐</td><td>☐</td><td>If yes, there are no specific provisions that address access to launch ramps without boarding piers.</td></tr>
</table>

[7] A boat slip is the portion of a pier, main pier, finger pier, or float where a boat is berthed or moored, or used for embarking or disembarking. Boarding piers that are not part of a boat launch ramp are classified as “boat slips” for the purpose of this survey.

[8] Accessible boat slips must have clear pier space at least 60 inches wide and as long as the slip. Every 10 feet of linear pier edge serving the accessible slips must have at least one continuous clear opening that is at least 60 inches wide. The width of the clear pier space may be 36 inches wide for a length of 24 inches, as long as multiple 36-inch segments are separated by segments that are 60 inches minimum clear in width and 60 inches minimum clear in length, and the clear openings are at least 60 inches deep. Edge protection is not required

Item Number	Notes

4.2.3* Wheelchair Turning Space. The space required for a wheelchair to make a 180-degree turn is a clear space of 60 in (1525 mm) diameter (see Fig. 3(a)) or a T-shaped space (see Fig. 3(b)). Appendix Note

4.2.4* Clear Floor or Ground Space for Wheelchairs.

4.2.4.1 Size and Approach. The minimum clear floor or ground space required to accommodate a single, stationary wheelchair and occupant is 30 in by 48 in (760 mm by 1220 mm) (see Fig. 4(a)). The minimum clear floor or ground space for wheelchairs may be positioned for forward or parallel approach to an object (see Fig. 4(b) and (c)). Clear floor or ground space for wheelchairs may be part of the knee space required under some objects.

4.2.4.2 Relationship of Maneuvering Clearance to Wheelchair Spaces. One full unobstructed side of the clear floor or ground space for a wheelchair shall adjoin or overlap an accessible route or adjoin another wheelchair clear floor space. If a clear floor space is located in an alcove or otherwise confined on all or part of three sides, additional maneuvering clearances shall be provided as shown in Fig. 4(d) and (e).

4.2.4.3 Surfaces for Wheelchair Spaces. Clear floor or ground spaces for wheelchairs shall comply with 4.5. Appendix Note

4.16.3* Height. The height of water closets shall be 17 in to 19 in (430 mm to 485 mm), measured to the top of the toilet seat (see Fig. 29(b)). Seats shall not be sprung to return to a lifted position. Appendix Note

4.16.4* Grab Bars. Grab bars for water closets not located in stalls shall comply with 4.26 and Fig. 29. The grab bar behind the water closet shall be 36 in (915 mm) minimum. Appendix Note

4.26.3 Structural Strength. The structural strength of grab bars, tub and shower seats, fasteners, and mounting devices shall meet the following specification:

(1) Bending stress in a grab bar or seat induced by the maximum bending moment from the application of 250 lbf (1112N) shall be less than the allowable stress for the material of the grab bar or seat.

(2) Shear stress induced in a grab bar or seat by the application of 250 lbf (1112N) shall be less than the allowable shear stress for the material of the grab bar or seat. If the connection between the grab bar or seat and its mounting bracket or other support is considered to be fully restrained, then direct and torsional shear stresses shall be totaled for the combined shear stress, which shall not exceed the allowable shear stress.

(3) Shear force induced in a fastener or mounting device from the application of 250 lbf (1112N) shall be less than the allowable lateral load of either the fastener or mounting device or the supporting structure, whichever is the smaller allowable load.

(4) Tensile force induced in a fastener by a direct tension force of 250 lbf (1112N) plus the maximum moment from the application of 250 lbf (1112N) shall be less than the allowable withdrawal load between the fastener and the supporting structure.

(5) Grab bars shall not rotate within their fittings.

4.27 Controls and Operating Mechanisms.

4.27.1 General. Controls and operating mechanisms required to be accessible by 4.1 shall comply with 4.27.

4.27.2 Clear Floor Space. Clear floor space complying with 4.2.4 that allows a forward or a parallel approach by a person using a wheelchair shall be provided at controls, dispensers, receptacles, and other operable equipment.

4.27.3* Height. The highest operable part of controls, dispensers, receptacles, and other operable equipment shall be placed within at least one of the reach ranges specified in 4.2.5 and 4.2.6. Electrical and communications system receptacles on walls shall be mounted no less than 15 in (380 mm) above the floor. Appendix Note

EXCEPTION: These requirements do not apply where the use of special equipment dictates otherwise or where electrical and communications systems receptacles are not normally intended for use by building occupants.

4.27.4 Operation. Controls and operating mechanisms shall be operable with one hand and shall not require tight grasping, pinching, or twisting of the wrist. The force required to activate controls shall be no greater than 5 lbf (22.2 N).

---

[i] Where railings, guards or handrails are provided, edge protection must be provided and extended a minimum of 2 inches above the ground or deck surface. Edge protection is not required where a railing, guardrail or handrail is provided, if the deck surface extends a minimum of 12 inches beyond the inside face of the railing.

[ii] At least one clear floor or ground space (30 inches by 48 inches) must be provided at each location that has a railing height of 34 inches maximum. If there is no railing, at least one clear space must be provided on a pier or platform.

[iii] Fishing piers and platforms must have at least one turning area, either 60-inch turning space or a T-shaped space to allow a person using a mobility device or wheelchair to make a 180-degree turn.

[iv] Gangways are not required to have to have landings at the end, if transition plates are provided. If the slope of the transition plate is greater that 1: 20 (5%), the transition plates must have a landing at the end of the transition plate not connected to the gangway and must comply with other ramp requirements.

ADA Compliance Program

MEDFORD PARKS AND RECREATION DEPARTMENT

ADA ACCESSIBILITY SURVEY FOR PARK FACILITIES

Date: March 2, 2016 **Estimated Cost:**

Facility: Holmes Park **Department Notified:**

Survey by: Jean Akers **Date of Notification:**

Check all applicable building codes and ADAAG publications prior to any renovation or construction. This survey is only a guideline.

ITEM				RECOMMENDATIONS
Accessible Routes[1]	**n/a**	**Yes**	**No**	**Accessible Routes**
☐ Check here if section does not apply to this park and move to next section.				
1. Does the park have accessible routes to all accessible facilities within the park?	☐	☐	☒	☐ Expand existing accessible routes as needed ☐ Construct accessible routes ☐ Note:
2. Where court sports are provided (i.e. tennis, basketball, and volleyball) are there accessible routes to each court? (Routes must connect both sides of the court)	☐	☒	☐	☐ Expand existing accessible routes as needed ☐ Construct accessible routes ☐ Note:
3. Are there accessible routes to any and all animal containment areas?	☒	☐	☐	☐ Expand existing accessible routes as needed ☐ Construct accessible routes ☐ Note:
4. Are there detectable warnings anywhere a route crosses a traffic way?	☐	☐	☒	☒ Repair as needed ☐ Note: **Into parking area**
ITEM				**RECOMMENDATIONS**
Parking and Drop-off Areas	**n/a**	**Yes**	**No**	**Parking and Drop-off Areas**
☐ Check here if section does not apply to this park and move to next section.				
5. Are an adequate number of accessible parking spaces available? The table below gives the ADAAG requirement for new construction and alterations (for lots with more than 100 spaces refer to ADAAG). Accessible Spaces per Overall spaces Total Spaces — Accessible Spaces Required 1 to 25 — 1 space 26 to 50 — 2 spaces 51 to 75 — 3 spaces 76 to 100 — 4 spaces	☐	☒	☐	☐ Reconfigure a reasonable number of spaces by repainting stripes. ☐ Construct accessible routes ☒ Note: **Need signs at required height with restriping of parking to ensure adequate H/C stall sizing.**

[1] Accessible routes must comply with ADAAG provisions for the location, width (minimum 36 inches) passing space, head room, surface, slope (Maximum 1:12 (or 8.33%). Accessible routes must connect all accessible elements within the facility. Accessible routes must be stable, firm and slip resistant. There is no requirement to change the surface of a playing field to an accessible surface.

6. Are an adequate number of van accessible spaces provided? At least 1 of every 8 accessible spaces must be van-accessible (with a minimum of 1 van-accessible space in all cases.)	☐	☒	☐	☐ Reconfigure to provide van-accessible space(s).
7. Are the access aisles part of the accessible route?	☐	☒	☐	☐ Add curb ramps. ☐ Reconstruct sidewalk
8. Are the accessible spaces closest to the accessible entrance?	☐	☒	☐	☐ Reconfigure spaces.
9. Are accessible spaces marked with and International Symbol of Accessibility? Are there signs reading "Van Accessible" at van spaces?	☐	☐	☒	☒ Add signs, placed so that they are not obstructed by cars.
10. Is there an enforcement procedure to ensure that accessible parking is used only by those who need it?	☒	☐	☐	☐ Implement a policy to check periodically for violators and report them to the proper authorities.
Team Player Seating Areas	**n/a**	**Yes**	**No**	**Team Player Seating Areas**
☒ Check here if section does not apply to this park and move to next section.				
11. Do fixed team or player seating areas contain the required number of wheelchair spaces and companion seats required by ADAAG?	☐	☐	☐	☐ Renovate as needed ☐ Install accessible seating area ☐ Note
Restrooms	**n/a**	**Yes**	**No**	**Restrooms**
☐ Check here if section does not apply to this park and move to next section.				
12. If rest rooms are available to the public, is at least one rest room (either one for each sex, or unisex) fully accessible?	☐	☒	☐	☐ Reconfigure rest room. ☐ Combine rest rooms to create one unisex accessible rest room. ☐ Note:
13. Are there signs at inaccessible rest rooms that give directions to accessible ones?	☒	☐	☐	☐ Install accessible signs. ☐ Note:
14. Is there tactile signage identifying rest rooms? *Note: Mount signs on the wall, on the latch side of the door, complying with the permanent signage.*	☐	☐	☒	☐ Add accessible signage, placed to the side of the door, 60 inches to centerline (not on the door itself). ☐ If symbols are used, add supplementary verbal signage. ☐ Note:
15. Are pictograms or symbols used to identify rest rooms, and, if used, are raised characters and braille included below?	☐	☐	☒	☐ If symbols are used, add supplementary verbal signage with raised characters and braille below pictogram symbol. ☐ Note:
16. Is the doorway at least 32 inches clear?	☐	☒	☐	☐ Install offset (swing-clear) hinges. ☐ Widen the doorway. ☐ Note:
17. Are doors equipped with accessible handles (operable with a closed fist), 48 inches high or less?	☐	☒	☐	☐ Lower handles. ☐ Replace knobs or latches with lever or loop handles. ☐ Add lever extensions. ☐ Install power-assisted or automatic door openers. ☐ Note:

18. Can doors be opened easily (5 lbf maximum force)?	☐	☒	☐	☐ Adjust or replace closers. ☐ Install lighter doors. ☐ Install power-assisted or automatic door openers. ☐ Note:
19. Does the entry configuration provide adequate maneuvering space for a person using a wheelchair? *Note: A person using a wheelchair needs 36 inches of clear width for forward movement, and a 5-foot diameter clear space or a T-shaped space to make turns. A minimum distance of 48 inches clear of the door swing is needed between the two doors of an entry vestibule.*	☐	☐	☒	☐ Rearrange furnishings such as chairs and trash cans. ☐ Remove inner door if there is a vestibule with two doors. ☐ Move or remove obstructing partitions. ☒ Note: **Tight hallway to entry door.**
20. Is there a 36-inch-wide path to all fixtures?	☐	☐	☐	☐ Remove obstructions. ☐ Note:
21. Is the stall door operable with a closed fist, inside and out?	☐	☐	☐	☐ Replace inaccessible knobs with lever or loop handles. ☐ Add lever extensions. ☐ Note:
22. Is there a wheelchair-accessible stall that has an area of at least 5 feet by 5 feet, clear of the door swing, OR is there a stall that is less accessible but that provides greater access than a typical stall (either 36 by 69 inches or 48 by 69 inches)?	☐	☐	☐	☐ Move or remove partitions. ☐ Reverse the door swing if it is safe to do so. ☐ Note:
23. In the accessible stall, are there grab bars behind and on the side wall nearest to the toilet?	☐	☐	☐	☐ Add grab bars. ☐ Note:
24. Is the toilet seat 17 to 19 inches high?	☐	☐	☐	☐ Add raised seat. ☐ Note:
25. Does one lavatory have a 30-inch-wide by 48-inch-deep clear space in front? *Note: A maximum of 19 inches of the required depth may be under the lavatory.*	☐	☐	☐	☐ Rearrange furnishings. ☐ Replace lavatory. ☐ Remove or alter cabinetry to provide space underneath. Make sure hot pipes are covered. ☐ Move a partition or wall. ☐ Note:
26. Is the lavatory rim no higher than 34 inches?	☐	☐	☐	☐ Adjust or replace lavatory. ☐ Note:
27. Is there at least 29 inches from the floor to the bottom of the lavatory apron? (Excluding pipes)?	☐	☐	☐	☐ Adjust or replace lavatory. ☐ Note:
28. Can the faucet be operated with one closed fist?	☐	☐	☐	☐ Replace faucet handles with paddle type. ☐ Note:
29. Are soap and other dispensers and hand dryers within reach ranges (see page 7) and usable with one closed fist?	☐	☐	☐	☐ Lower dispensers. ☐ Replace with or provide additional accessible dispensers. ☐ Note:
30. Is the mirror mounted with the bottom edge of the reflecting surface 40 inches high or lower?	☐	☐	☐	☐ Lower or tilt down the mirror. ☐ Add a larger mirror anywhere in the room. ☐ Note:
Pit Toilets	**n/a**	**Yes**	**No**	**Pit Toilets**
31.				

☒ Check here if section does not apply to this park and move to next section.				
32. Is there a clear space of 60 inches by 60 inches adjacent to the toilet?	☐	☐	☐	☐ Repair as needed ☐ Note:
33. Does the height of the pit toilet riser comply with ADAAG 4.16.3?	☐	☐	☐	☐ Repair as needed ☐ Note:
34. Is the maneuvering space less than or equal to 1:50? (1:33 maximum allowed for drainage)	☐	☐	☐	☐ Repair as needed ☐ Note:
35. If the pit toilet has walls, are grab bars installed consistent with ADAAG 4.16.4?	☐	☐	☐	☐ Repair as needed ☐ Note:
36. Is the surface adjacent to the pit toilet firm and stable?	☐	☐	☐	☐ Repair as needed ☐ Note:
Utilities	**n/a**	**Yes**	**No**	**Utilities**
☒ Check here if section does not apply to this park and move to next section.				
37. Is the maneuvering space less than or equal to 1:50? (1:33 maximum allowed for drainage)	☐	☐	☐	☐ Repair as needed ☐ Note:
38. Is the surface adjacent to the utility firm and stable?	☐	☐	☐	☐ Repair as needed ☐ Note:
39. Are fixed water spouts located 28 inches minimum to 36 inches maximum above the ground or floor space?	☐	☐	☐	☐ Repair as needed ☐ Note:
40. Is the maneuvering space less than or equal to 1:50? (1:33 maximum allowed for drainage)	☐	☐	☐	☐ Repair as needed ☐ Note:
Drinking Fountains	**n/a**	**Yes**	**No**	**Drinking Fountains**
☐ Check here if section does not apply to this park and move to next section.				
41. Is there at least one fountain with clear floor space of at least 30 by 48 inches in front?	☐	☒	☐	☐ Clear more room by rearranging or removing furnishings. ☐ Note:
42. Is there one fountain with its spout no higher than 36 inches from the ground, and another with a standard height spout (or a single "hi-lo" fountain)?	☐	☐	☒	☐ Provide cup dispensers for fountains with spouts that are too high. ☐ Provide accessible water cooler. ☒ Note: **1" too high**
43. Are controls mounted on the front or on the side near the front edge, and operable with one closed fist?	☐	☒	☐	☐ Replace the controls. ☐ Note:
44. Is each water fountain cane-detectable (located within 27 inches off the floor or protruding less than 4 inches from the wall, into the circulation path?	☐	☐	☒	☐ Place a planter or other cane-detectable barrier on each side at floor level. ☐ Note:
Telephones	**n/a**	**Yes**	**No**	**Telephones**
☒ Check here if section does not apply to this park and move to next section.				
45. If pay or public use phones are provided, is there clear floor space of at least 30 by 48 inches in front of at least one?	☐	☐	☐	☐ Move furnishings. ☐ Replace booth with open station. ☐ Note:
46. Is the highest operable part of the phone no higher than 48 inches (up to 54 inches if a side approach is possible)?	☐	☐	☐	☐ Lower telephone. ☐ Note:
47. Does the phone protrude no more than 4 inches into the circulation space?	☐	☐	☐	☐ Place a cane-detectable barrier on each side at floor level. ☐ Note:

48. Does the phone have push-button controls?	☐	☐	☐	☐ Contact phone company to install push-buttons. ☐ Note:
49. Is the phone hearing-aid compatible?	☐	☐	☐	☐ Contact phone company to replace with hearing-aid compatible phone. ☐ Note:
50. Is the phone adapted with volume control?	☐	☐	☐	☐ Contact the phone company to add volume control. ☐ Note:
51. Is the phone with volume control identified with appropriate signage?	☐	☐	☐	☐ Add signage. ☐ Note:
52. If there are four or more public phones in the building, is one of the phones equipped with a text telephone (TT or TDD)?	☐	☐	☐	☐ Install a text telephone. ☐ Have a portable text telephone available. ☐ Provide a shelf and outlet next to phone. ☐ Note:
53. Is the location of the text telephone identified by accessible signage bearing the International TDD Symbol?	☐	☐	☐	☐ Add signage. ☐ Note:

Directional and Informational Signage	**n/a**	**Yes**	**No**	**Directional and Informational Signage**
☐ Check here if section does not apply to this park and move to next section.				
54. If mounted about 80 inches, do they have letters at least 3 inches high, with high contrast, and non-glare finish?	☐	☐	☒	☒ Review requirements and replace signs as needed, meeting the requirements for character size, contrast, and finish. ☒ Note: Rules sign
55. Do directional and informational signs comply with legibility requirements? 56. (Building directories or temporary signs need not comply.)	☐	☐	☒	☒ Review requirements and replace signs as needed, meeting the requirements for character size, contrast, and finish. ☐ Note:

Seats, Tables and Counters	**n/a**	**Yes**	**No**	**Seats, Tables and Counters**
☐ Check here if section does not apply to this park and move to next section.				
50. Are the spaces for wheelchair seating distributed throughout? (Cover or uncovered gathering areas, bleachers)	☐	☐	☒	☐ Rearrange tables to allow room for wheelchairs in seating areas throughout the area. ☐ Remove some fixed seating. ☐ Note:
51. If picnic tables are provided, are at least 50% and no less than two of the tables, accessible?	☐	☐	☒	☐ Replace as needed ☐ Note:
52. Are knee spaces at accessible picnic tables at least 27 inches high, 30 inches wide, and 19 inches deep?	☐	☐	☒	☐ Replace or raise tables. ☐ Note:
53. Are picnic tables spaced such that all areas of the table are accessible?	☐	☐	☒	☐ Rearrange tables to allow room for wheelchairs in seating areas throughout the area. ☐ Remove some fixed seating. ☐ Note:
54. At each type of cashier counter, is there a portion of the main counter that is no more than 36 inches high?	☒	☐	☐	☐ Provide a lower auxiliary counter or folding shelf. ☐ Arrange the counter and surrounding furnishings to create a space to hand items back and forth.

				☐ Note:
55. Is there a portion of food-ordering counters that is no more than 36 inches high, or is there space at the side for passing items to customers who have difficulty reaching over a high counter?	☒	☐	☐	☐ Lower section of counter. ☐ Arrange the counter and surrounding furnishings to create a space to pass items. ☐ Note:
Fire Rings	**n/a**	**Yes**	**No**	**Fire Rings**
☒ Check here if section does not apply to this park and move to next section.				
56. Do all fire rings have a clear space extending a minimum 48" deep by 48" wide at all usable portions of the ring?	☐	☐	☐	☐ Install clear spaces as needed ☐ Note:
57. Are the clear spaces around the fire pit on a firm and stable surface?	☐	☐	☐	☐ Correct as needed ☐ Note:
58. Is the fire surface height a minimum of 9" above the ground/floor?	☐	☐	☐	☐ Construct or renovate pits to meet clearances ☐ Note:
59. Are the slopes around fire pits not more than 1:50?	☐	☐	☐	☐ Construct or renovate pits to meet clearances ☐ Note:
Cooking Surfaces, Grills, Pedestal Grills[2]	**n/a**	**Yes**	**No**	**Cooking Surfaces, Grills, Pedestal Grills**
☒ Check here if section does not apply to this park and move to next section.				
60. Are accessible cooking features dispersed throughout the area and among the types provided?	☐	☐	☐	☐ Evenly disperse cooking features ☐ Note:
61. Are accessible cooking feature surfaces installed between 15 inches and 34 inches above the ground/floor?	☐	☐	☐	☐ Install as required ☐ Note:
62. Do operating controls and mechanisms comply with current ADAAG 4.27.1 (General) 4.27.2 (Clear Floor Space and 4.27.3 (Height)?	☐	☐	☐	☐ Install as required ☐ Note:
Fixed Trash/Recycling Containers	**n/a**	**Yes**	**No**	**Fixed Trash/Recycling Containers**
☒ Check here if section does not apply to this park and move to next section.				
63. Are trash and recycling containers accessible and do they comply with ADAAG 4.27?	☐	☐	☐	☐ Replace as needed ☐ Note:
Overlooks/Viewing Areas	**n/a**	**Yes**	**No**	**Overlooks/Viewing Areas**
☒ Check here if section does not apply to this park and move to next section.				
64. Are all viewing areas on an accessible route?	☐	☐	☐	☐ Install accessible paths as needed ☐ Note:
65. Are all viewing areas constructed to provide an unobstructed view?	☐	☐	☐	☐ Repair as needed ☐ Note:
66. Is there at least one maneuvering space that complies with ADAAG 4.2.3?	☐	☐	☐	☐ Repair as needed ☐ Note:
67. Is the ground surface firm and stable?	☐	☐	☐	☐ Repair as needed ☐ Note:
68. Is the maneuvering space less than or	☐	☐	☐	☐ Repair as needed

[2] Where there is only one cooking surface, grill or pedestal grill in a provided picnic area, it shall be accessible. Where multiple cooking features are provided in a picnic area, 50 percent, but no less than 2 shall be accessible.

equal to 1:50? (1:33 maximum allowed for drainage)				☐ Note:
Telescopes/Periscopes	**n/a**	**Yes**	**No**	**Telescopes/Periscopes**
☒ Check here if section does not apply to this park and move to next section.				
69. Are at least 20%, but not less than one, telescope or periscope that complies with ADAAG 4.27?	☐	☐	☐	☐ Repair as needed ☐ Note:
70. Are the eye pieces usable from a seated position?	☐	☐	☐	☐ Repair as needed ☐ Note:
71. Is the ground surface firm and stable?	☐	☐	☐	☐ Repair as needed ☐ Note:
72. Is the maneuvering space less than or equal to 1:50? (1:33 maximum allowed for drainage)	☐	☐	☐	☐ Repair as needed ☐ Note:
Benches	**n/a**	**Yes**	**No**	**Benches**
☐ Check here if section does not apply to this park and move to next section.				
73. Where multiple benches are provided, are at least 50% consistent with this section?	☐	☐	☒	☐ Repair as needed ☐ Note:
74. Are accessible benches dispersed evenly throughout the park?	☐	☐	☒	☐ Disperse benches evenly throughout the park ☐ Note:
75. Of the accessible benches that are provided, do at least 50% of those benches have armrests consistent with ADAAG 4.26.3?	☐	☐	☒	☐ Repair as needed ☐ Note:
76. Are the front edges of accessible benches between 17 and 19 inches maximum above the ground/floor?	☐	☐	☒	☐ Repair as needed ☐ Note:
77. Are floor spaces adjacent to benches consistent with ADAAG 4.2.4?	☐	☐	☒	☐ Repair as needed ☐ Note:
78. Is the ground/floor surface around the accessible benches firm and stable?	☐	☐	☒	☐ Repair as needed ☐ Note:
79. Do all accessible benches have back support the full length of the bench?	☐	☒	☐	☐ Repair as needed ☐ Note:
Playground Equipment Accessibility	**n/a**	**Yes**	**No**	**Playground Equipment Accessibility**
☐ Check here if section does not apply to this park and move to next section.				
80. Is there at least one of each play component on an accessible route[3]?	☐	☒	☐	☐ Expand existing accessible routes as needed ☐ Construct accessible routes ☐ Note: bark surface
81. Is there at least one of each ground-level play component on an accessible route?	☐	☒	☐	☐ Expand existing accessible routes as needed ☐ Construct accessible routes ☐ Note:
82. Are the play components integrated for use by all children; including those with disabilities?	☐	☒	☐	☐ Ensure play components on accessible routes can be used by all children ☐ Note:
Trails	**n/a**	**Yes**	**No**	**Trails**

[3] Different types of play components are based on the general experience provided by the play component. Different types include, but are no limited to, rocking, swinging, climbing, spinning and sliding. Components may be elevated or at or below ground level.

☐ Check here if section does not apply to this park and move to next section.				
83. Is the clear width of the trail 36 inches?	☐	☒	☐	☐ Renovate as required ☐ Construct all new trails to code ☐ Note:
84. Are openings in the trail less than ½ inch? *Note: (Board slat spaces, etc. – Elongated openings should be placed so that the long dimension is perpendicular or diagonal to the dominate direction of travel.)*	☐	☐	☒	☐ Renovate as required ☐ Construct all new trails to code ☐ Note: **Asphalt pavement repairs needed**
85. Is the trail free of constructed or natural barriers?	☐	☐	☒	☐ Remove as needed ☒ Note: **Bollard obstructs access at parking lot**
86. Are all overhead hazards maintained at a height that is sufficient for all expected users of the trail? (Remember, Objects that protrude into a pathway at a height greater than 27" are difficult for the blind or persons with visual disabilities who use canes to detect.)	☐	☒	☐	☐ Renovate as required ☐ Construct all new trails to code ☐ Note:
87. Is there a segment in the trail that has a 10% grade for more than 30 feet?	☐	☒	☐	☐ Construct level rest interval[4] ☐ Note:
88. Are all cross slopes a maximum of 3%?	☐	☐	☒	☐ Renovate as required ☐ Construct all new trails to code ☒ Note: **3.7% near playground**
89. Are all tread obstacles a maximum of 1"?	☐	☐	☒	☒ Renovate as required ☐ Construct all new trails to code ☒ Note: **Root damage on trail**
90. Are passing spaces (6" x 60") provided at maximum intervals of 200 ft. whenever the clear tread width is less then 60"?	☒	☐	☐	☐ Renovate as required ☐ Construct all new trails to code ☐ Note:
91. Does the trail have or require edge protection?	☐	☐	☒	☐ Renovate as required – Where provided, edge protection should be a minimum of 3". ☐ Construct all new trails to code ☐ Note:
92. Does the trail have signs that clearly indicate the type of use, rules and difficult conditions for the trail?	☐	☐	☒	☐ Renovate as required ☐ Construct all new trails to code ☐ Note:
93. Are there signs that warn users that changes in trail level or tread obstacles could not be removed?	☐	☐	☒	☐ Renovate as required ☐ Construct all new trails to code ☐ Note:
94. Are there detectable warnings anywhere a route crosses a traffic way?	☐	☐	☒	☐ Repair as needed ☐ Note:
Shooting Facilities	**n/a**	**Yes**	**No**	**Shooting Facilities**
☒ Check here if section does not apply to this park and move to next section.				
95. Does the English Pit range have 60-inch diameter space with slopes not steeper than 1:48 so a wheelchair can turn around?	☐	☐	☐	☐ Renovate as needed ☐ Install accessible seating area ☐ Note

[4] Resting intervals must be 60" minimum on length and at least as wide as the widest portion of the trail segment leading to the resting interval with a cross slope that does not exceed 3%.

96. Do the firing benches have a wheelchair accessible area with a bench between 27 and 34 inches with a minimum of 19" leg space?	☐	☐	☐	☐ Renovate as needed ☐ Install accessible seating area ☐ Note
97. If fixed firing positions are provided, at least 5% but not less than one of each type of firing position, must be served by an accessible route. Does English Pit have an accessible route?	☐	☐	☐	☐ Renovate as needed ☐ Install accessible route ☐ Note
98. Does the park have accessible routes to all target impact areas?	☐	☐	☐	☐ Expand existing accessible routes as needed ☐ Construct accessible routes ☐ Note:
Aquatic Recreation Facilities	**n/a**	**Yes**	**No**	**Aquatic Recreation Facilities**
☒ Check here if section does not apply to this park and move to next section.				
99. Is there an accessible route (36" wide) over beach areas that allow access to the water's edge?	☐	☐	☐	☐ Renovate as needed ☐ Install accessible route ☐ Note
100. Are there accessible routes with handrails that lead into designated swim areas such as ponds, lakes, etc.	☐	☐	☐	☐ Renovate as needed ☐ Install accessible route ☐ Note
Fishing piers and Platforms	**n/a**	**Yes**	**No**	**Fishing piers and Platforms**
☒ Check here if section does not apply to this park and move to next section.				
101. Does this park have a facility specifically designed and constructed for fishing?	☐	☐	☐	(Structures that were not built specifically for fishing do not need to meet ADAAG guidelines. Structures designed as fishing piers or platforms, must have an accessible route.)
102. Does the park have a gangway serving the fishing pier or platform?	☐	☐	☐	☐ Install a gangway platform – Gangway 1:12 maximum slope or at least 30 feet long. ☐ Renovate existing platform to meet code (Check specific building codes) ☐ Note
103. Does the gangway have a transition plate to the pier or platform that meets code?	☐	☐	☐	☐ Install a transition plate[5] ☐ Adjust existing transition plate to meet code ☐ Note
104. Does the gangway have handrails?	☐	☐	☐	☐ Install handrail to meet code ☐ Ensure existing rails meet code ☐ Note
105. Does the fishing pier or platform have railings, guards or handrails[6]?	☐	☐	☐	☐ Install as needed ☐ Renovate existing structure to meet code ☐ Note
106. Does the fishing pier or platform have edge protection[i]?	☐	☐	☐	☐ Install ☐ Renovate existing edge protection ☐ Note

[5] Gangways are not required to have to have landings at the end, if transition plates are provided. If the slope of the transition plate is greater that 1: 20 (5%), the transition plates must have a landing at the end of the transition plate not connected to the gangway and must comply with other ramp requirements.

[6] Where railings, guards or handrails are provided on a fishing pier or platform, at least 25 % of the rails must be 34 inches or less in height above the ground or dock so accommodate a person in a wheelchair. These railings must be dispersed as equally as possible to all areas of the fishing pier.

107. Does the fishing pier or platform have clear floor or ground space[ii]?	☐	☐	☐	☐ Install ☐ Renovate existing edge protection ☐ Note
108. Does the fishing pier or platform have sufficient turning space[iii]?	☐	☐	☐	☐ Install ☐ Renovate existing edge protection ☐ Note
Boating Facilities	**n/a**	**Yes**	**No**	**Boating Facilities**
☒ Check here if section does not apply to this park and move to next section.				
109. Is there an accessible route to the boating facilities?	☐	☐	☐	☐ Install ☐ Renovate existing route ☐ Note
110. Does the gangway to the dock or floating dock deigned to provide for a maximum 1:12 (8.33%) slope ? *Note: Not required to be longer than 80 feet. (Elevators may be used in lieu of gangways) In smaller facilities with less than 25 boat slips, the slope of the gangway may exceed 1:12, if the gangway is at least 30 feet long.*	☐	☐	☐	☐ Install ☐ Renovate existing route ☐ Note
111. Does the gangway have a transition plate to the pier or platform that meets code[iv]?	☐	☐	☐	☐ Install a transition plate ☐ Adjust existing transition plate to meet code ☐ Note

<table>
<tr><td>112. Where boat slips[7] are provided, does the number of accessible slips[8] comply with the table to the right?
Note: If boat slips at a facility are not identified or demarcated by length, each 40 feet of boat slip edge along the perimeter of a pier will be counted as one boat slip</td><td>☐</td><td>☐</td><td>☐</td><td>
<table>
<tr><th colspan="2">Number of Accessible Boat Slips Required</th></tr>
<tr><td>Total Slips in Facility</td><td>Minimum Accessible Slips</td></tr>
<tr><td>1-25</td><td>1</td></tr>
<tr><td>26-50</td><td>2</td></tr>
<tr><td>50-100</td><td>3</td></tr>
<tr><td>101-150</td><td>4</td></tr>
</table>
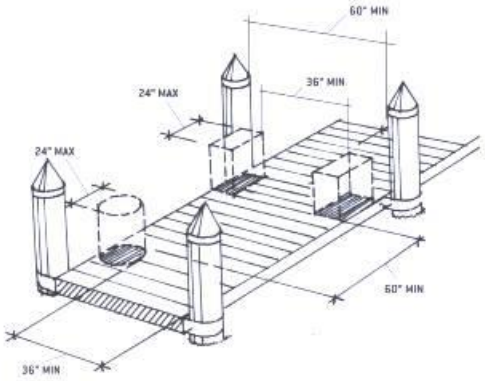

PIER CLEARANCE SPACE REDUCTION
</td></tr>
<tr><td>If the facility only has a boarding pier (see footnote # 9) at least 5% but not less than, must comply with these guidelines. The entire length of accessible boarding piers must comply with the same provisions that apply to slips.

113. Does this facility meet this regulation?</td><td>☐</td><td>☐</td><td>☐</td><td>☐ Install
☐ Renovate boarding pier
☐ Note</td></tr>
<tr><td>114. Is this facility compromised only of a boat launch with no boarding ramp or pier?</td><td>☐</td><td>☐</td><td>☐</td><td>If yes, there are no specific provisions that address access to launch ramps without boarding piers.</td></tr>
</table>

[7] A boat slip is the portion of a pier, main pier, finger pier, or float where a boat is berthed or moored, or used for embarking or disembarking. Boarding piers that are not part of a boat launch ramp are classified as “boat slips” for the purpose of this survey.

[8] Accessible boat slips must have clear pier space at least 60 inches wide and as long as the slip. Every 10 feet of linear pier edge serving the accessible slips must have at least one continuous clear opening that is at least 60 inches wide. The width of the clear pier space may be 36 inches wide for a length of 24 inches, as long as multiple 36-inch segments are separated by segments that are 60 inches minimum clear in width and 60 inches minimum clear in length, and the clear openings are at least 60 inches deep. Edge protection is not required

Item Number	Notes
	only one picnic table out of 18 with a W/C space
	Restripe parking to show clear H/C spaces and access lanes

4.2.3* Wheelchair Turning Space. The space required for a wheelchair to make a 180-degree turn is a clear space of 60 in (1525 mm) diameter (see Fig. 3(a)) or a T-shaped space (see Fig. 3(b)). Appendix Note

4.2.4* Clear Floor or Ground Space for Wheelchairs.

4.2.4.1 Size and Approach. The minimum clear floor or ground space required to accommodate a single, stationary wheelchair and occupant is 30 in by 48 in (760 mm by 1220 mm) (see Fig. 4(a)). The minimum clear floor or ground space for wheelchairs may be positioned for forward or parallel approach to an object (see Fig. 4(b) and (c)). Clear floor or ground space for wheelchairs may be part of the knee space required under some objects.

4.2.4.2 Relationship of Maneuvering Clearance to Wheelchair Spaces. One full unobstructed side of the clear floor or ground space for a wheelchair shall adjoin or overlap an accessible route or adjoin another wheelchair clear floor space. If a clear floor space is located in an alcove or otherwise confined on all or part of three sides, additional maneuvering clearances shall be provided as shown in Fig. 4(d) and (e).

4.2.4.3 Surfaces for Wheelchair Spaces. Clear floor or ground spaces for wheelchairs shall comply with 4.5. Appendix Note

4.16.3* Height. The height of water closets shall be 17 in to 19 in (430 mm to 485 mm), measured to the top of the toilet seat (see Fig. 29(b)). Seats shall not be sprung to return to a lifted position. Appendix Note

4.16.4* Grab Bars. Grab bars for water closets not located in stalls shall comply with 4.26 and Fig. 29. The grab bar behind the water closet shall be 36 in (915 mm) minimum. Appendix Note

4.26.3 Structural Strength. The structural strength of grab bars, tub and shower seats, fasteners, and mounting devices shall meet the following specification:

(1) Bending stress in a grab bar or seat induced by the maximum bending moment from the application of 250 lbf (1112N) shall be less than the allowable stress for the material of the grab bar or seat.

(2) Shear stress induced in a grab bar or seat by the application of 250 lbf (1112N) shall be less than the allowable shear stress for the material of the grab bar or seat. If the connection between the grab bar or seat and its mounting bracket or other support is considered to be fully restrained, then direct and torsional shear stresses shall be totaled for the combined shear stress, which shall not exceed the allowable shear stress.

(3) Shear force induced in a fastener or mounting device from the application of 250 lbf (1112N) shall be less than the allowable lateral load of either the fastener or mounting device or the supporting structure, whichever is the smaller allowable load.

(4) Tensile force induced in a fastener by a direct tension force of 250 lbf (1112N) plus the maximum moment from the application of 250 lbf (1112N) shall be less than the allowable withdrawal load between the fastener and the supporting structure.

(5) Grab bars shall not rotate within their fittings.

4.27 Controls and Operating Mechanisms.

4.27.1 General. Controls and operating mechanisms required to be accessible by 4.1 shall comply with 4.27.

4.27.2 Clear Floor Space. Clear floor space complying with 4.2.4 that allows a forward or a parallel approach by a person using a wheelchair shall be provided at controls, dispensers, receptacles, and other operable equipment.

4.27.3* Height. The highest operable part of controls, dispensers, receptacles, and other operable equipment shall be placed within at least one of the reach ranges specified in 4.2.5 and 4.2.6. Electrical and communications system receptacles on walls shall be mounted no less than 15 in (380 mm) above the floor. Appendix Note

EXCEPTION: These requirements do not apply where the use of special equipment dictates otherwise or where electrical and communications systems receptacles are not normally intended for use by building occupants.

4.27.4 Operation. Controls and operating mechanisms shall be operable with one hand and shall not require tight grasping, pinching, or twisting of the wrist. The force required to activate controls shall be no greater than 5 lbf (22.2 N).

---

[i] Where railings, guards or handrails are provided, edge protection must be provided and extended a minimum of 2 inches above the ground or deck surface. Edge protection is not required where a railing, guardrail or handrail is provided, if the deck surface extends a minimum of 12 inches beyond the inside face of the railing.

[ii] At least one clear floor or ground space (30 inches by 48 inches) must be provided at each location that has a railing height of 34 inches maximum. If there is no railing, at least one clear space must be provided on a pier or platform.

[iii] Fishing piers and platforms must have at least one turning area, either 60-inch turning space or a T-shaped space to allow a person using a mobility device or wheelchair to make a 180-degree turn.

[iv] Gangways are not required to have to have landings at the end, if transition plates are provided. If the slope of the transition plate is greater that 1: 20 (5%), the transition plates must have a landing at the end of the transition plate not connected to the gangway and must comply with other ramp requirements.

ADA Checklist for Existing Facilities

Priority 1 – Approach & Entrance

Based on the 2010 ADA Standards for Accessible Design

Project: Medford Parks ADA Transition Plan

Building

Location: Holmes Park

Date: March 2, 2016

Surveyors: Jean Akers

Contact Information

An accessible route from site arrival points and an accessible entrance should be provided for everyone.

This checklist was produced by the New England ADA Center, a project of the Institute for Human Centered Design and a member of the ADA National Network. This checklist was developed under a grant from the Department of Education, NIDRR grant number H133A060092-09A. However the contents do not necessarily represent the policy of the Department of Education, and you should not assume endorsement by the Federal Government.

Questions or comments on the checklist contact the New England ADA Center at 617-695-0085 voice/tty or ADAinfo@NewEnglandADA.org

For the full set of checklists, including the checklists for recreation facilities visit www.ADAchecklist.org.

Priority 1 – Approach & Entrance				**Comments**	**Possible Solutions**
1.1	Is there at least one route from site arrival points (parking, passenger loading zones, public sidewalks and public transportation stops) that does not require the use of stairs? [See 2010 ADA Standards for Accessible Design – 206.2.1]	☒ Yes ☐ No If yes, location of route:		Photo #:	• Add a ramp • Regrade to 1:20 maximum slope • Add a lift if site constraints prevent other solutions
Parking Accessible parking spaces should be identified by size, access aisle and signage.					
1.2	If parking is provided for the public, are an adequate number of accessible spaces provided? [208.2]	☒ Yes ☐ No Total #: Accessible #:	**Total Spaces** / **Accessible Spaces** 1 - 25 / 1 26 - 50 / 2 51 - 75 / 3 76 - 100 / 4 100+ see 2010 Standards 208.2	Photo #:	• Reconfigure by repainting lines • •
1.3	Of the accessible spaces, is at least one a van accessible space?* [208.2.4]	☒ Yes ☐ No	*For every 6 or fraction of 6 parking spaces required by the table above, at least 1 should be a van accessible space.	Photo #:	* If constructed before 3/15/2012, parking is compliant if at least 1 in every 8 accessible spaces is van accessible • Reconfigure by repainting lines

1.4	Are accessible spaces at least 8 feet wide with an access aisle at least 5 feet wide? [502.2, 502.3] Note: Two spaces may share an access aisle. Check state/local requirements; some specify that each space have its own aisle.	☒ Yes ☐ No Measurement: 11'space/8'aisle	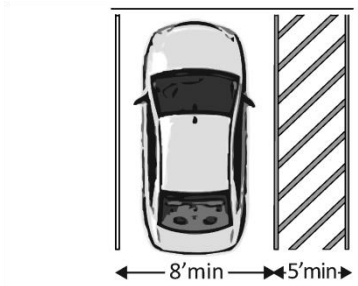	Photo #:	• Reconfigure by repainting lines • •
1.5	Is the van accessible space: At least 11 feet wide with an access aisle at least 5 feet wide? Or At least 8 feet wide with an access aisle at least 8 feet wide? [502.2]	☒ Yes ☐ No Measurement: 11'space/8'aisle ☐ Yes ☐ No Measurement:	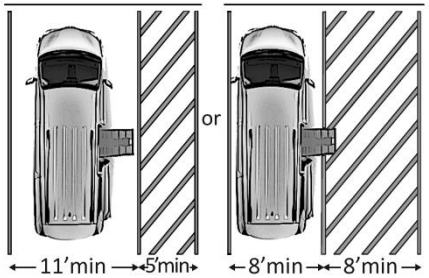	Photo #:	• Reconfigure to provide van-accessible space(s) • •
1.6	Is at least 98 inches of vertical clearance provided for the van accessible space? [502.5]	☒ Yes ☐ No Measurement:	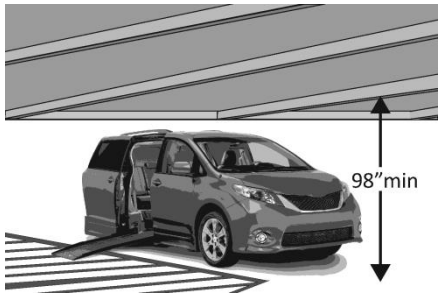	Photo #:	• Reconfigure to provide van-accessible space(s) • •

1.7	Are the access aisles marked so as to discourage parking in them? [502.3.3] Note: The marking method and color may be addressed by state/local requirements.	☒ Yes ☐ No	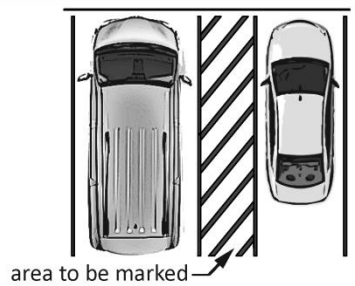	Paint has faded; needs restriping. Photo #:	• Mark access aisles • Restripe access aisle •
1.8	Is the slope of the accessible parking spaces and access aisles no steeper than 1:48 in all directions? [502.4]	☒ Yes ☐ No Measurement:		Photo #:	• Regrade surface • •
1.9	Do the access aisles adjoin an accessible route? [502.3]	☒ Yes ☐ No		Photo #:	• Create accessible route • Relocate accessible space •
1.10	Are accessible spaces identified with a sign that includes the International Symbol of Accessibility? Is the bottom of the sign at least 60 inches above the ground? [502.6] Note: The International Symbol of Accessibility is not required on the ground.	☐ Yes ☒ No ☐ Yes ☒ No Measurement:	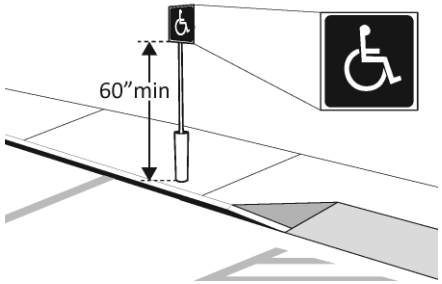	Photo #:	• Install one sign • Remount existing sign to required height •

1.11	Are there signs reading "van accessible" at van accessible spaces? [502.6]	☐ Yes ☒ No		Photo #:	• Install signs • •
1.12	Of the total parking spaces, are the accessible spaces located on the closest accessible route to the accessible entrance(s)? [208.3.1] Note: If parking serves multiple entrances, accessible parking should be dispersed.	☒ Yes ☐ No		Photo #:	• Reconfigure spaces • •
Exterior Accessible Route					
1.13	Is the route stable, firm and slip-resistant? [302.1]	☒ Yes ☐ No		Photo #:	• Repair uneven paving • Fill small bumps and breaks with patches • Replace gravel with asphalt or other surface
1.14	Is the route at least 36 inches wide? [403.5.1]	☐ Yes ☒ No Measurement: 34"	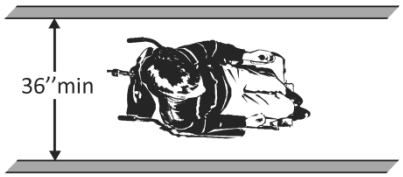	Access route from parking to restrooms is constrained by bollard placement, splitting path into narrow widths. This route also has slope issues that create additional barrier.	• Change or move landscaping, furnishings or other items • Widen route, or • Remove bollard; reconfigure path to flatter grade.

	Note: The accessible route can narrow to 32 inches min. for a max. of 24 inches. These narrower portions of the route must be at least 48 inches from each other.		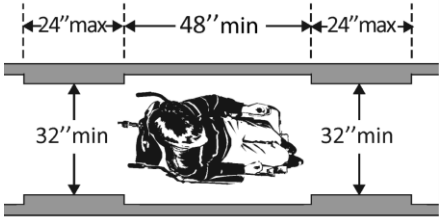 Photo #:	
1.15	If the route is greater than 200 feet in length and less than 60 inches wide, is there a passing space no less than 60 x 60 inches? [403.5.3]	☐ Yes ☐ No Measurement:	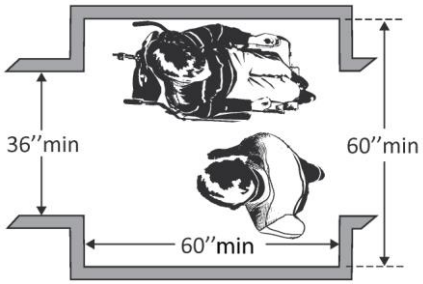 Photo #:	• Widen route for passing space • •
1.16	If there are grates or openings on the route, are the openings no larger than ½ inches? Is the long dimension perpendicular to the dominant direction of travel? [302.3]	☐ Yes ☐ No Measurement: ☐ Yes ☐ No	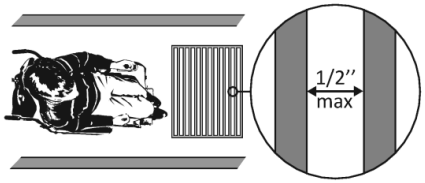 Photo #:	• Replace or move grate • •

ADA Compliance Program

MEDFORD PARKS AND RECREATION DEPARTMENT

ADA ACCESSIBILITY SURVEY FOR PARK FACILITIES

Date: March 3, 2016 **Estimated Cost:**

Facility: Howard Park **Department Notified:**

Survey by: Jean Akers **Date of Notification:**

Check all applicable building codes and ADAAG publications prior to any renovation or construction. This survey is only a guideline.

ITEM				RECOMMENDATIONS
Accessible Routes[1]	**n/a**	**Yes**	**No**	**Accessible Routes**
☐ Check here if section does not apply to this park and move to next section.				
1. Does the park have accessible routes to all accessible facilities within the park?	☐	☐	☒	☐ Expand existing accessible routes as needed ☐ Construct accessible routes ☐ Note:
2. Where court sports are provided (i.e. tennis, basketball, and volleyball) are there accessible routes to each court? (Routes must connect both sides of the court)	☐	☐	☒	☐ Expand existing accessible routes as needed ☒ Construct accessible routes ☐ Note:
3. Are there accessible routes to any and all animal containment areas?	☒	☐	☐	☐ Expand existing accessible routes as needed ☐ Construct accessible routes ☐ Note:
4. Are there detectable warnings anywhere a route crosses a traffic way?	☐	☐	☒	☐ Repair as needed ☐ Note:
ITEM				**RECOMMENDATIONS**
Parking and Drop-off Areas	**n/a**	**Yes**	**No**	**Parking and Drop-off Areas**
☐ Check here if section does not apply to this park and move to next section.				
5. Are an adequate number of accessible parking spaces available? The table below gives the ADAAG requirement for new construction and alterations (for lots with more than 100 spaces refer to ADAAG). Accessible Spaces per Overall spaces	☐	☒	☐	☐ Reconfigure a reasonable number of spaces by repainting stripes. ☐ Construct accessible routes ☐ Note:

Total Spaces	Accessible Spaces Required
25 spaces	**1 van-accessible**
1 to 25	1 space
26 to 50	2 spaces
51 to 75	3 spaces
76 to 100	4 spaces

[1] Accessible routes must comply with ADAAG provisions for the location, width (minimum 36 inches) passing space, head room, surface, slope (Maximum 1:12 (or 8.33%). Accessible routes must connect all accessible elements within the facility. Accessible routes must be stable, firm and slip resistant. There is no requirement to change the surface of a playing field to an accessible surface.

6. Are an adequate number of van accessible spaces provided? At least 1 of every 8 accessible spaces must be van-accessible (with a minimum of 1 van-accessible space in all cases.)	☐	☒	☐	☐ Reconfigure to provide van-accessible space(s).
7. Are the access aisles part of the accessible route?	☐	☐	☒	☐ Add curb ramps. ☐ Reconstruct sidewalk
8. Are the accessible spaces closest to the accessible entrance?	☐	☐	☒	☐ Reconfigure spaces. **Close to school not park**
9. Are accessible spaces marked with and International Symbol of Accessibility? Are there signs reading "Van Accessible" at van spaces?	☐	☒	☐	☐ Add signs, placed so that they are not obstructed by cars.
10. Is there an enforcement procedure to ensure that accessible parking is used only by those who need it?	☐	☒	☐	☐ Implement a policy to check periodically for violators and report them to the proper authorities.
Team Player Seating Areas	**n/a**	**Yes**	**No**	**Team Player Seating Areas**
☐ Check here if section does not apply to this park and move to next section.				
11. Do fixed team or player seating areas contain the required number of wheelchair spaces and companion seats required by ADAAG?	☐	☐	☒	☐ Renovate as needed ☒ Install accessible seating area ☐ Note
Restrooms	**n/a**	**Yes**	**No**	**Restrooms**
☒ Check here if section does not apply to this park and move to next section.				
12. If rest rooms are available to the public, is at least one rest room (either one for each sex, or unisex) fully accessible?	☐	☐	☐	☐ Reconfigure rest room. ☐ Combine rest rooms to create one unisex accessible rest room. ☐ Note:
13. Are there signs at inaccessible rest rooms that give directions to accessible ones?	☐	☐	☐	☐ Install accessible signs. ☐ Note:
14. Is there tactile signage identifying rest rooms? *Note: Mount signs on the wall, on the latch side of the door, complying with the permanent signage.*	☐	☐	☐	☐ Add accessible signage, placed to the side of the door, 60 inches to centerline (not on the door itself). ☐ If symbols are used, add supplementary verbal signage. ☐ Note:
15. Are pictograms or symbols used to identify rest rooms, and, if used, are raised characters and braille included below?	☐	☐	☐	☐ If symbols are used, add supplementary verbal signage with raised characters and braille below pictogram symbol. ☐ Note:
16. Is the doorway at least 32 inches clear?	☐	☐	☐	☐ Install offset (swing-clear) hinges. ☐ Widen the doorway. ☐ Note:
17. Are doors equipped with accessible handles (operable with a closed fist), 48 inches high or less?	☐	☐	☐	☐ Lower handles. ☐ Replace knobs or latches with lever or loop handles. ☐ Add lever extensions. ☐ Install power-assisted or automatic door openers. ☐ Note:

18. Can doors be opened easily (5 lbf maximum force)?	☐	☐	☐	☐ Adjust or replace closers. ☐ Install lighter doors. ☐ Install power-assisted or automatic door openers. ☐ Note:
19. Does the entry configuration provide adequate maneuvering space for a person using a wheelchair? *Note: A person using a wheelchair needs 36 inches of clear width for forward movement, and a 5-foot diameter clear space or a T-shaped space to make turns. A minimum distance of 48 inches clear of the door swing is needed between the two doors of an entry vestibule.*	☐	☐	☐	☐ Rearrange furnishings such as chairs and trash cans. ☐ Remove inner door if there is a vestibule with two doors. ☐ Move or remove obstructing partitions. ☐ Note:
20. Is there a 36-inch-wide path to all fixtures?	☐	☐	☐	☐ Remove obstructions. ☐ Note:
21. Is the stall door operable with a closed fist, inside and out?	☐	☐	☐	☐ Replace inaccessible knobs with lever or loop handles. ☐ Add lever extensions. ☐ Note:
22. Is there a wheelchair-accessible stall that has an area of at least 5 feet by 5 feet, clear of the door swing, OR is there a stall that is less accessible but that provides greater access than a typical stall (either 36 by 69 inches or 48 by 69 inches)?	☐	☐	☐	☐ Move or remove partitions. ☐ Reverse the door swing if it is safe to do so. ☐ Note:
23. In the accessible stall, are there grab bars behind and on the side wall nearest to the toilet?	☐	☐	☐	☐ Add grab bars. ☐ Note:
24. Is the toilet seat 17 to 19 inches high?	☐	☐	☐	☐ Add raised seat. ☐ Note:
25. Does one lavatory have a 30-inch-wide by 48-inch-deep clear space in front? *Note: A maximum of 19 inches of the required depth may be under the lavatory.*	☐	☐	☐	☐ Rearrange furnishings. ☐ Replace lavatory. ☐ Remove or alter cabinetry to provide space underneath. Make sure hot pipes are covered. ☐ Move a partition or wall. ☐ Note:
26. Is the lavatory rim no higher than 34 inches?	☐	☐	☐	☐ Adjust or replace lavatory. ☐ Note:
27. Is there at least 29 inches from the floor to the bottom of the lavatory apron? (Excluding pipes)?	☐	☐	☐	☐ Adjust or replace lavatory. ☐ Note:
28. Can the faucet be operated with one closed fist?	☐	☐	☐	☐ Replace faucet handles with paddle type. ☐ Note:
29. Are soap and other dispensers and hand dryers within reach ranges (see page 7) and usable with one closed fist?	☐	☐	☐	☐ Lower dispensers. ☐ Replace with or provide additional accessible dispensers. ☐ Note:
30. Is the mirror mounted with the bottom edge of the reflecting surface 40 inches high or lower?	☐	☐	☐	☐ Lower or tilt down the mirror. ☐ Add a larger mirror anywhere in the room. ☐ Note:
Pit Toilets	**n/a**	**Yes**	**No**	**Pit Toilets**
31.				

☒ Check here if section does not apply to this park and move to next section.				
32. Is there a clear space of 60 inches by 60 inches adjacent to the toilet?	☐	☐	☐	☐ Repair as needed ☐ Note:
33. Does the height of the pit toilet riser comply with ADAAG 4.16.3?	☐	☐	☐	☐ Repair as needed ☐ Note:
34. Is the maneuvering space less than or equal to 1:50? (1:33 maximum allowed for drainage)	☐	☐	☐	☐ Repair as needed ☐ Note:
35. If the pit toilet has walls, are grab bars installed consistent with ADAAG 4.16.4?	☐	☐	☐	☐ Repair as needed ☐ Note:
36. Is the surface adjacent to the pit toilet firm and stable?	☐	☐	☐	☐ Repair as needed ☐ Note:
Utilities	**n/a**	**Yes**	**No**	**Utilities**
☒ Check here if section does not apply to this park and move to next section.				
37. Is the maneuvering space less than or equal to 1:50? (1:33 maximum allowed for drainage)	☐	☐	☐	☐ Repair as needed ☐ Note:
38. Is the surface adjacent to the utility firm and stable?	☐	☐	☐	☐ Repair as needed ☐ Note:
39. Are fixed water spouts located 28 inches minimum to 36 inches maximum above the ground or floor space?	☐	☐	☐	☐ Repair as needed ☐ Note:
40. Is the maneuvering space less than or equal to 1:50? (1:33 maximum allowed for drainage)	☐	☐	☐	☐ Repair as needed ☐ Note:
Drinking Fountains	**n/a**	**Yes**	**No**	**Drinking Fountains**
☒ Check here if section does not apply to this park and move to next section.				
41. Is there at least one fountain with clear floor space of at least 30 by 48 inches in front?	☐	☐	☐	☐ Clear more room by rearranging or removing furnishings. ☐ Note:
42. Is there one fountain with its spout no higher than 36 inches from the ground, and another with a standard height spout (or a single "hi-lo" fountain)?	☐	☐	☐	☐ Provide cup dispensers for fountains with spouts that are too high. ☐ Provide accessible water cooler. ☐ Note:
43. Are controls mounted on the front or on the side near the front edge, and operable with one closed fist?	☐	☐	☐	☐ Replace the controls. ☐ Note:
44. Is each water fountain cane-detectable (located within 27 inches off the floor or protruding less than 4 inches from the wall, into the circulation path?	☐	☐	☐	☐ Place a planter or other cane-detectable barrier on each side at floor level. ☐ Note:
Telephones	**n/a**	**Yes**	**No**	**Telephones**
☒ Check here if section does not apply to this park and move to next section.				
45. If pay or public use phones are provided, is there clear floor space of at least 30 by 48 inches in front of at least one?	☐	☐	☐	☐ Move furnishings. ☐ Replace booth with open station. ☐ Note:
46. Is the highest operable part of the phone no higher than 48 inches (up to 54 inches if a side approach is possible)?	☐	☐	☐	☐ Lower telephone. ☐ Note:
47. Does the phone protrude no more than 4 inches into the circulation space?	☐	☐	☐	☐ Place a cane-detectable barrier on each side at floor level. ☐ Note:

48. Does the phone have push-button controls?	☐	☐	☐	☐ Contact phone company to install push-buttons. ☐ Note:
49. Is the phone hearing-aid compatible?	☐	☐	☐	☐ Contact phone company to replace with hearing-aid compatible phone. ☐ Note:
50. Is the phone adapted with volume control?	☐	☐	☐	☐ Contact the phone company to add volume control. ☐ Note:
51. Is the phone with volume control identified with appropriate signage?	☐	☐	☐	☐ Add signage. ☐ Note:
52. If there are four or more public phones in the building, is one of the phones equipped with a text telephone (TT or TDD)?	☐	☐	☐	☐ Install a text telephone. ☐ Have a portable text telephone available. ☐ Provide a shelf and outlet next to phone. ☐ Note:
53. Is the location of the text telephone identified by accessible signage bearing the International TDD Symbol?	☐	☐	☐	☐ Add signage. ☐ Note:

Directional and Informational Signage	**n/a**	**Yes**	**No**	**Directional and Informational Signage**
☐ Check here if section does not apply to this park and move to next section.				
54. If mounted about 80 inches, do they have letters at least 3 inches high, with high contrast, and non-glare finish?	☐	☐	☒	☒ Review requirements and replace signs as needed, meeting the requirements for character size, contrast, and finish. ☐ Note:
55. Do directional and informational signs comply with legibility requirements? 56. (Building directories or temporary signs need not comply.)	☐	☐	☒	☒ Review requirements and replace signs as needed, meeting the requirements for character size, contrast, and finish. ☐ Note:

Seats, Tables and Counters	**n/a**	**Yes**	**No**	**Seats, Tables and Counters**
☒ Check here if section does not apply to this park and move to next section.				
50. Are the spaces for wheelchair seating distributed throughout? (Cover or uncovered gathering areas, bleachers)	☐	☐	☐	☐ Rearrange tables to allow room for wheelchairs in seating areas throughout the area. ☐ Remove some fixed seating. ☐ Note:
51. If picnic tables are provided, are at least 50% and no less than two of the tables, accessible?	☐	☐	☐	☐ Replace as needed ☐ Note:
52. Are knee spaces at accessible picnic tables at least 27 inches high, 30 inches wide, and 19 inches deep?	☐	☐	☐	☐ Replace or raise tables. ☐ Note:
53. Are picnic tables spaced such that all areas of the table are accessible?	☐	☐	☐	☐ Rearrange tables to allow room for wheelchairs in seating areas throughout the area. ☐ Remove some fixed seating. ☐ Note:
54. At each type of cashier counter, is there a portion of the main counter that is no more than 36 inches high?	☐	☐	☐	☐ Provide a lower auxiliary counter or folding shelf. ☐ Arrange the counter and surrounding furnishings to create a space to hand items back and forth.

				☐ Note:
55. Is there a portion of food-ordering counters that is no more than 36 inches high, or is there space at the side for passing items to customers who have difficulty reaching over a high counter?	☐	☐	☐	☐ Lower section of counter. ☐ Arrange the counter and surrounding furnishings to create a space to pass items. ☐ Note:
Fire Rings	**n/a**	**Yes**	**No**	**Fire Rings**
☒ Check here if section does not apply to this park and move to next section.				
56. Do all fire rings have a clear space extending a minimum 48" deep by 48" wide at all usable portions of the ring?	☐	☐	☐	☐ Install clear spaces as needed ☐ Note:
57. Are the clear spaces around the fire pit on a firm and stable surface?	☐	☐	☐	☐ Correct as needed ☐ Note:
58. Is the fire surface height a minimum of 9" above the ground/floor?	☐	☐	☐	☐ Construct or renovate pits to meet clearances ☐ Note:
59. Are the slopes around fire pits not more than 1:50?	☐	☐	☐	☐ Construct or renovate pits to meet clearances ☐ Note:
Cooking Surfaces, Grills, Pedestal Grills[2]	**n/a**	**Yes**	**No**	**Cooking Surfaces, Grills, Pedestal Grills**
☒ Check here if section does not apply to this park and move to next section.				
60. Are accessible cooking features dispersed throughout the area and among the types provided?	☐	☐	☐	☐ Evenly disperse cooking features ☐ Note:
61. Are accessible cooking feature surfaces installed between 15 inches and 34 inches above the ground/floor?	☐	☐	☐	☐ Install as required ☐ Note:
62. Do operating controls and mechanisms comply with current ADAAG 4.27.1 (General) 4.27.2 (Clear Floor Space and 4.27.3 (Height)?	☐	☐	☐	☐ Install as required ☐ Note:
Fixed Trash/Recycling Containers	**n/a**	**Yes**	**No**	**Fixed Trash/Recycling Containers**
☒ Check here if section does not apply to this park and move to next section.				
63. Are trash and recycling containers accessible and do they comply with ADAAG 4.27?	☐	☐	☐	☐ Replace as needed ☐ Note:
Overlooks/Viewing Areas	**n/a**	**Yes**	**No**	**Overlooks/Viewing Areas**
☒ Check here if section does not apply to this park and move to next section.				
64. Are all viewing areas on an accessible route?	☐	☐	☐	☐ Install accessible paths as needed ☐ Note:
65. Are all viewing areas constructed to provide an unobstructed view?	☐	☐	☐	☐ Repair as needed ☐ Note:
66. Is there at least one maneuvering space that complies with ADAAG 4.2.3?	☐	☐	☐	☐ Repair as needed ☐ Note:
67. Is the ground surface firm and stable?	☐	☐	☐	☐ Repair as needed ☐ Note:
68. Is the maneuvering space less than or	☐	☐	☐	☐ Repair as needed

[2] Where there is only one cooking surface, grill or pedestal grill in a provided picnic area, it shall be accessible. Where multiple cooking features are provided in a picnic area, 50 percent, but no less than 2 shall be accessible.

equal to 1:50? (1:33 maximum allowed for drainage)				☐ Note:
Telescopes/Periscopes	**n/a**	**Yes**	**No**	**Telescopes/Periscopes**
☒ Check here if section does not apply to this park and move to next section.				
69. Are at least 20%, but not less than one, telescope or periscope that complies with ADAAG 4.27?	☐	☐	☐	☐ Repair as needed ☐ Note:
70. Are the eye pieces usable from a seated position?	☐	☐	☐	☐ Repair as needed ☐ Note:
71. Is the ground surface firm and stable?	☐	☐	☐	☐ Repair as needed ☐ Note:
72. Is the maneuvering space less than or equal to 1:50? (1:33 maximum allowed for drainage)	☐	☐	☐	☐ Repair as needed ☐ Note:
Benches	**n/a**	**Yes**	**No**	**Benches**
☒ Check here if section does not apply to this park and move to next section.				
73. Where multiple benches are provided, are at least 50% consistent with this section?	☐	☐	☐	☐ Repair as needed ☐ Note: **only 1 bench**
74. Are accessible benches dispersed evenly throughout the park?	☐	☐	☐	☐ Disperse benches evenly throughout the park ☐ Note: just at play area
75. Of the accessible benches that are provided, do at least 50% of those benches have armrests consistent with ADAAG 4.26.3?	☐	☐	☐	☐ Repair as needed ☐ Note:
76. Are the front edges of accessible benches between 17 and 19 inches maximum above the ground/floor?	☐	☐	☐	☐ Repair as needed ☐ Note:
77. Are floor spaces adjacent to benches consistent with ADAAG 4.2.4?	☐	☐	☐	☐ Repair as needed ☐ Note:
78. Is the ground/floor surface around the accessible benches firm and stable?	☐	☐	☐	☐ Repair as needed ☐ Note:
79. Do all accessible benches have back support the full length of the bench?	☐	☐	☐	☐ Repair as needed ☐ Note:
Playground Equipment Accessibility	**n/a**	**Yes**	**No**	**Playground Equipment Accessibility**
☒ Check here if section does not apply to this park and move to next section.				
80. Is there at least one of each play component on an accessible route[3]?	☐	☐	☐	☐ Expand existing accessible routes as needed ☐ Construct accessible routes ☐ Note: bark surface
81. Is there at least one of each ground-level play component on an accessible route?	☐	☐	☐	☐ Expand existing accessible routes as needed ☐ Construct accessible routes ☐ Note:
82. Are the play components integrated for use by all children; including those with disabilities?	☐	☐	☐	☐ Ensure play components on accessible routes can be used by all children ☐ Note:
Trails	**n/a**	**Yes**	**No**	**Trails**

[3] Different types of play components are based on the general experience provided by the play component. Different types include, but are no limited to, rocking, swinging, climbing, spinning and sliding. Components may be elevated or at or below ground level.

☐ Check here if section does not apply to this park and move to next section.				
83. Is the clear width of the trail 36 inches?	☐	☐	☒	☐ Renovate as required ☐ Construct all new trails to code ☐ Note: **Gap in trail at parking lot into park**
84. Are openings in the trail less than ½ inch? *Note: (Board slat spaces, etc. – Elongated openings should be placed so that the long dimension is perpendicular or diagonal to the dominate direction of travel.)*	☐	☐	☒	☐ Renovate as required ☐ Construct all new trails to code ☐ Note: **Asphalt pavement gaps from roots, age & expansion**
85. Is the trail free of constructed or natural barriers?	☐	☐	☒	☐ Remove as needed ☐ Note: **Root upheavals**
86. Are all overhead hazards maintained at a height that is sufficient for all expected users of the trail? (Remember, Objects that protrude into a pathway at a height greater than 27" are difficult for the blind or persons with visual disabilities who use canes to detect.)	☐	☒	☐	☐ Renovate as required ☐ Construct all new trails to code ☐ Note:
87. Is there a segment in the trail that has a 10% grade for more than 30 feet?	☐	☐	☒	☐ Construct level rest interval[4] ☐ Note:
88. Are all cross slopes a maximum of 3%?	☐	☒	☐	☐ Renovate as required ☐ Construct all new trails to code ☐ Note:
89. Are all tread obstacles a maximum of 1"?	☐	☐	☒	☐ Renovate as required ☐ Construct all new trails to code ☐ Note:
90. Are passing spaces (6" x 60") provided at maximum intervals of 200 ft. whenever the clear tread width is less then 60"?	☒	☐	☐	☐ Renovate as required ☐ Construct all new trails to code ☐ Note:
91. Does the trail have or require edge protection?	☐	☐	☒	☐ Renovate as required – Where provided, edge protection should be a minimum of 3". ☐ Construct all new trails to code ☐ Note:
92. Does the trail have signs that clearly indicate the type of use, rules and difficult conditions for the trail?	☐	☐	☒	☐ Renovate as required ☐ Construct all new trails to code ☐ Note:
93. Are there signs that warn users that changes in trail level or tread obstacles could not be removed?	☐	☐	☒	☐ Renovate as required ☐ Construct all new trails to code ☐ Note:
94. Are there detectable warnings anywhere a route crosses a traffic way?	☐	☐	☒	☐ Repair as needed ☐ Note: **Needed at parking & Howard St.**
Shooting Facilities	**n/a**	**Yes**	**No**	**Shooting Facilities**
☒ Check here if section does not apply to this park and move to next section.				
95. Does the English Pit range have 60-inch diameter space with slopes not steeper than 1:48 so a wheelchair can turn around?	☐	☐	☐	☐ Renovate as needed ☐ Install accessible seating area ☐ Note

[4] Resting intervals must be 60" minimum on length and at least as wide as the widest portion of the trail segment leading to the resting interval with a cross slope that does not exceed 3%.

96. Do the firing benches have a wheelchair accessible area with a bench between 27 and 34 inches with a minimum of 19" leg space?	☐	☐	☐	☐ Renovate as needed ☐ Install accessible seating area ☐ Note
97. If fixed firing positions are provided, at least 5% but not less than one of each type of firing position, must be served by an accessible route. Does English Pit have an accessible route?	☐	☐	☐	☐ Renovate as needed ☐ Install accessible route ☐ Note
98. Does the park have accessible routes to all target impact areas?	☐	☐	☐	☐ Expand existing accessible routes as needed ☐ Construct accessible routes ☐ Note:
Aquatic Recreation Facilities	**n/a**	**Yes**	**No**	**Aquatic Recreation Facilities**
☒ Check here if section does not apply to this park and move to next section.				
99. Is there an accessible route (36" wide) over beach areas that allow access to the water's edge?	☐	☐	☐	☐ Renovate as needed ☐ Install accessible route ☐ Note
100. Are there accessible routes with handrails that lead into designated swim areas such as ponds, lakes, etc.	☐	☐	☐	☐ Renovate as needed ☐ Install accessible route ☐ Note
Fishing piers and Platforms	**n/a**	**Yes**	**No**	**Fishing piers and Platforms**
☒ Check here if section does not apply to this park and move to next section.				
101. Does this park have a facility specifically designed and constructed for fishing?	☐	☐	☐	(Structures that were not built specifically for fishing do not need to meet ADAAG guidelines. Structures designed as fishing piers or platforms, must have an accessible route.)
102. Does the park have a gangway serving the fishing pier or platform?	☐	☐	☐	☐ Install a gangway platform – Gangway 1:12 maximum slope or at least 30 feet long. ☐ Renovate existing platform to meet code (Check specific building codes) ☐ Note
103. Does the gangway have a transition plate to the pier or platform that meets code?	☐	☐	☐	☐ Install a transition plate[5] ☐ Adjust existing transition plate to meet code ☐ Note
104. Does the gangway have handrails?	☐	☐	☐	☐ Install handrail to meet code ☐ Ensure existing rails meet code ☐ Note
105. Does the fishing pier or platform have railings, guards or handrails[6]?	☐	☐	☐	☐ Install as needed ☐ Renovate existing structure to meet code ☐ Note
106. Does the fishing pier or platform have edge protection[i]?	☐	☐	☐	☐ Install ☐ Renovate existing edge protection ☐ Note

[5] Gangways are not required to have to have landings at the end, if transition plates are provided. If the slope of the transition plate is greater that 1: 20 (5%), the transition plates must have a landing at the end of the transition plate not connected to the gangway and must comply with other ramp requirements.

[6] Where railings, guards or handrails are provided on a fishing pier or platform, at least 25 % of the rails must be 34 inches or less in height above the ground or dock so accommodate a person in a wheelchair. These railings must be dispersed as equally as possible to all areas of the fishing pier.

107. Does the fishing pier or platform have clear floor or ground space[ii]?	☐	☐	☐	☐ Install ☐ Renovate existing edge protection ☐ Note
108. Does the fishing pier or platform have sufficient turning space[iii]?	☐	☐	☐	☐ Install ☐ Renovate existing edge protection ☐ Note
Boating Facilities	**n/a**	**Yes**	**No**	**Boating Facilities**
☒ Check here if section does not apply to this park and move to next section.				
109. Is there an accessible route to the boating facilities?	☐	☐	☐	☐ Install ☐ Renovate existing route ☐ Note
110. Does the gangway to the dock or floating dock deigned to provide for a maximum 1:12 (8.33%) slope ? *Note: Not required to be longer than 80 feet. (Elevators may be used in lieu of gangways) In smaller facilities with less than 25 boat slips, the slope of the gangway may exceed 1:12, if the gangway is at least 30 feet long.*	☐	☐	☐	☐ Install ☐ Renovate existing route ☐ Note
111. Does the gangway have a transition plate to the pier or platform that meets code[iv]?	☐	☐	☐	☐ Install a transition plate ☐ Adjust existing transition plate to meet code ☐ Note

<table>
<tr>
<td>112. Where boat slips[7] are provided, does the number of accessible slips[8] comply with the table to the right?
Note: If boat slips at a facility are not identified or demarcated by length, each 40 feet of boat slip edge along the perimeter of a pier will be counted as one boat slip</td>
<td>☐</td>
<td>☐</td>
<td>☐</td>
<td>
<table>
<tr><th colspan="2">Number of Accessible Boat Slips Required</th></tr>
<tr><td>Total Slips in Facility</td><td>Minimum Accessible Slips</td></tr>
<tr><td>1-25</td><td>1</td></tr>
<tr><td>26-50</td><td>2</td></tr>
<tr><td>50-100</td><td>3</td></tr>
<tr><td>101-150</td><td>4</td></tr>
</table>
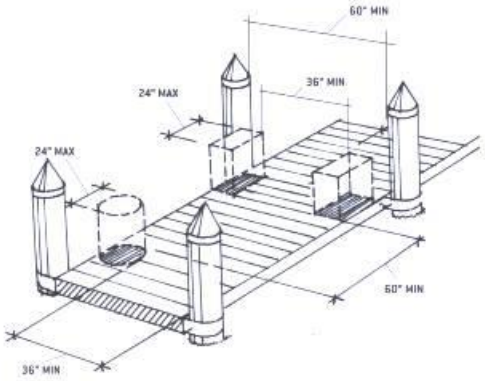

PIER CLEARANCE SPACE REDUCTION
</td>
</tr>
<tr>
<td>If the facility only has a boarding pier (see footnote # 9) at least 5% but not less than, must comply with these guidelines. The entire length of accessible boarding piers must comply with the same provisions that apply to slips.

113. Does this facility meet this regulation?</td>
<td>☐</td>
<td>☐</td>
<td>☐</td>
<td>☐ Install
☐ Renovate boarding pier
☐ Note</td>
</tr>
<tr>
<td>114. Is this facility compromised only of a boat launch with no boarding ramp or pier?</td>
<td>☐</td>
<td>☐</td>
<td>☐</td>
<td>If yes, there are no specific provisions that address access to launch ramps without boarding piers.</td>
</tr>
</table>

[7] A boat slip is the portion of a pier, main pier, finger pier, or float where a boat is berthed or moored, or used for embarking or disembarking. Boarding piers that are not part of a boat launch ramp are classified as “boat slips” for the purpose of this survey.

[8] Accessible boat slips must have clear pier space at least 60 inches wide and as long as the slip. Every 10 feet of linear pier edge serving the accessible slips must have at least one continuous clear opening that is at least 60 inches wide. The width of the clear pier space may be 36 inches wide for a length of 24 inches, as long as multiple 36-inch segments are separated by segments that are 60 inches minimum clear in width and 60 inches minimum clear in length, and the clear openings are at least 60 inches deep. Edge protection is not required

Item Number	Notes
	Mutt mitt dispensers at >52" height and slightly off-set from paved trail.
	Asphalt trail has significant root damage – creating obstacles & tripping hazard.
	Southeast pedestrian access into park and basketball court is grassy slope - unpaved; non-ADA.

4.2.3* Wheelchair Turning Space. The space required for a wheelchair to make a 180-degree turn is a clear space of 60 in (1525 mm) diameter (see Fig. 3(a)) or a T-shaped space (see Fig. 3(b)). Appendix Note

4.2.4* Clear Floor or Ground Space for Wheelchairs.

4.2.4.1 Size and Approach. The minimum clear floor or ground space required to accommodate a single, stationary wheelchair and occupant is 30 in by 48 in (760 mm by 1220 mm) (see Fig. 4(a)). The minimum clear floor or ground space for wheelchairs may be positioned for forward or parallel approach to an object (see Fig. 4(b) and (c)). Clear floor or ground space for wheelchairs may be part of the knee space required under some objects.

4.2.4.2 Relationship of Maneuvering Clearance to Wheelchair Spaces. One full unobstructed side of the clear floor or ground space for a wheelchair shall adjoin or overlap an accessible route or adjoin another wheelchair clear floor space. If a clear

floor space is located in an alcove or otherwise confined on all or part of three sides, additional maneuvering clearances shall be provided as shown in Fig. 4(d) and (e).

4.2.4.3 Surfaces for Wheelchair Spaces. Clear floor or ground spaces for wheelchairs shall comply with 4.5. Appendix Note

4.16.3* Height. The height of water closets shall be 17 in to 19 in (430 mm to 485 mm), measured to the top of the toilet seat (see Fig. 29(b)). Seats shall not be sprung to return to a lifted position. Appendix Note

4.16.4* Grab Bars. Grab bars for water closets not located in stalls shall comply with 4.26 and Fig. 29. The grab bar behind the water closet shall be 36 in (915 mm) minimum. Appendix Note

4.26.3 Structural Strength. The structural strength of grab bars, tub and shower seats, fasteners, and mounting devices shall meet the following specification:

(1) Bending stress in a grab bar or seat induced by the maximum bending moment from the application of 250 lbf (1112N) shall be less than the allowable stress for the material of the grab bar or seat.

(2) Shear stress induced in a grab bar or seat by the application of 250 lbf (1112N) shall be less than the allowable shear stress for the material of the grab bar or seat. If the connection between the grab bar or seat and its mounting bracket or other support is considered to be fully restrained, then direct and torsional shear stresses shall be totaled for the combined shear stress, which shall not exceed the allowable shear stress.

(3) Shear force induced in a fastener or mounting device from the application of 250 lbf (1112N) shall be less than the allowable lateral load of either the fastener or mounting device or the supporting structure, whichever is the smaller allowable load.

(4) Tensile force induced in a fastener by a direct tension force of 250 lbf (1112N) plus the maximum moment from the application of 250 lbf (1112N) shall be less than the allowable withdrawal load between the fastener and the supporting structure.

(5) Grab bars shall not rotate within their fittings.

4.27 Controls and Operating Mechanisms.

4.27.1 General. Controls and operating mechanisms required to be accessible by 4.1 shall comply with 4.27.

4.27.2 Clear Floor Space. Clear floor space complying with 4.2.4 that allows a forward or a parallel approach by a person using a wheelchair shall be provided at controls, dispensers, receptacles, and other operable equipment.

4.27.3* Height. The highest operable part of controls, dispensers, receptacles, and other operable equipment shall be placed within at least one of the reach ranges

specified in 4.2.5 and 4.2.6. Electrical and communications system receptacles on walls shall be mounted no less than 15 in (380 mm) above the floor. Appendix Note

> EXCEPTION: These requirements do not apply where the use of special equipment dictates otherwise or where electrical and communications systems receptacles are not normally intended for use by building occupants.

4.27.4 Operation. Controls and operating mechanisms shall be operable with one hand and shall not require tight grasping, pinching, or twisting of the wrist. The force required to activate controls shall be no greater than 5 lbf (22.2 N).

---

[i] Where railings, guards or handrails are provided, edge protection must be provided and extended a minimum of 2 inches above the ground or deck surface. Edge protection is not required where a railing, guardrail or handrail is provided, if the deck surface extends a minimum of 12 inches beyond the inside face of the railing.

[ii] At least one clear floor or ground space (30 inches by 48 inches) must be provided at each location that has a railing height of 34 inches maximum. If there is no railing, at least one clear space must be provided on a pier or platform.

[iii] Fishing piers and platforms must have at least one turning area, either 60-inch turning space or a T-shaped space to allow a person using a mobility device or wheelchair to make a 180-degree turn.

[iv] Gangways are not required to have to have landings at the end, if transition plates are provided. If the slope of the transition plate is greater that 1: 20 (5%), the transition plates must have a landing at the end of the transition plate not connected to the gangway and must comply with other ramp requirements.

ADA Compliance Program

MEDFORD PARKS AND RECREATION DEPARTMENT

ADA ACCESSIBILITY SURVEY FOR PARK FACILITIES

Date: March 2, 2016 **Estimated Cost:**

Facility: Jackson Park **Department Notified:**

Survey by: Jean Akers **Date of Notification:**

Check all applicable building codes and ADAAG publications prior to any renovation or construction. This survey is only a guideline.

ITEM				RECOMMENDATIONS
Accessible Routes[1]	**n/a**	**Yes**	**No**	**Accessible Routes**
☐ Check here if section does not apply to this park and move to next section.				
1. Does the park have accessible routes to all accessible facilities within the park?	☐	☐	☒	☐ Expand existing accessible routes as needed ☒ Construct accessible routes ☐ Note: **Missing paths & ramps**
2. Where court sports are provided (i.e. tennis, basketball, and volleyball) are there accessible routes to each court? (Routes must connect both sides of the court)	☐	☐	☒	☐ Expand existing accessible routes as needed ☐ Construct accessible routes ☐ Note:
3. Are there accessible routes to any and all animal containment areas?	☒	☐	☐	☐ Expand existing accessible routes as needed ☐ Construct accessible routes ☐ Note:
4. Are there detectable warnings anywhere a route crosses a traffic way?	☐	☐	☒	☐ Repair as needed ☐ Note:
ITEM				**RECOMMENDATIONS**
Parking and Drop-off Areas	**n/a**	**Yes**	**No**	**Parking and Drop-off Areas**
☐ Check here if section does not apply to this park and move to next section.				
5. Are an adequate number of accessible parking spaces available? The table below gives the ADAAG requirement for new construction and alterations (for lots with more than 100 spaces refer to ADAAG). Accessible Spaces per Overall spaces	☐	☒	☐	☐ Reconfigure a reasonable number of spaces by repainting stripes. ☐ Construct accessible routes ☐ Note: **parking area needs restriping**

Total Spaces	Accessible Spaces Required
1 to 25	1 space
26 to 50	2 spaces
51 to 75	3 spaces
76 to 100	4 spaces
37 in north lot	**2 spaces**

[1] Accessible routes must comply with ADAAG provisions for the location, width (minimum 36 inches) passing space, head room, surface, slope (Maximum 1:12 (or 8.33%). Accessible routes must connect all accessible elements within the facility. Accessible routes must be stable, firm and slip resistant. There is no requirement to change the surface of a playing field to an accessible surface.

6. Are an adequate number of van accessible spaces provided? At least 1 of every 8 accessible spaces must be van-accessible (with a minimum of 1 van-accessible space in all cases.)	☐	☒	☐	☐ Reconfigure to provide van-accessible space(s).
7. Are the access aisles part of the accessible route?	☐	☒	☐	☐ Add curb ramps. ☐ Reconstruct sidewalk
8. Are the accessible spaces closest to the accessible entrance?	☐	☐	☒	☒ Reconfigure spaces.
9. Are accessible spaces marked with and International Symbol of Accessibility? Are there signs reading "Van Accessible" at van spaces?	☐	☐	☒	☒ Add signs, placed so that they are not obstructed by cars. **Existing sign is too low.**
10. Is there an enforcement procedure to ensure that accessible parking is used only by those who need it?	☒	☐	☐	☐ Implement a policy to check periodically for violators and report them to the proper authorities.
Team Player Seating Areas	**n/a**	**Yes**	**No**	**Team Player Seating Areas**
☐ Check here if section does not apply to this park and move to next section.				
11. Do fixed team or player seating areas contain the required number of wheelchair spaces and companion seats required by ADAAG?	☐	☐	☒	☐ Renovate as needed ☒ Install accessible seating area ☐ Note**: Fagone field team dugouts are inaccessible**
Restrooms	**n/a**	**Yes**	**No**	**Restrooms**
☒ Check here if section does not apply to this park and move to next section.				
12. If rest rooms are available to the public, is at least one rest room (either one for each sex, or unisex) fully accessible?	☐	☐	☐	☐ Reconfigure rest room. ☐ Combine rest rooms to create one unisex accessible rest room. ☐ Note: **Locked for winter**
13. Are there signs at inaccessible rest rooms that give directions to accessible ones?	☐	☐	☐	☐ Install accessible signs. ☐ Note:
14. Is there tactile signage identifying rest rooms? *Note: Mount signs on the wall, on the latch side of the door, complying with the permanent signage.*	☐	☐	☐	☐ Add accessible signage, placed to the side of the door, 60 inches to centerline (not on the door itself). ☐ If symbols are used, add supplementary verbal signage. ☐ Note:
15. Are pictograms or symbols used to identify rest rooms, and, if used, are raised characters and braille included below?	☐	☐	☐	☐ If symbols are used, add supplementary verbal signage with raised characters and braille below pictogram symbol. ☐ Note:
16. Is the doorway at least 32 inches clear?	☐	☐	☐	☐ Install offset (swing-clear) hinges. ☐ Widen the doorway. ☐ Note:
17. Are doors equipped with accessible handles (operable with a closed fist), 48 inches high or less?	☐	☐	☐	☐ Lower handles. ☐ Replace knobs or latches with lever or loop handles. ☐ Add lever extensions. ☐ Install power-assisted or automatic door openers. ☐ Note:

18. Can doors be opened easily (5 lbf maximum force)?	☐	☐	☐	☐ Adjust or replace closers. ☐ Install lighter doors. ☐ Install power-assisted or automatic door openers. ☐ Note:
19. Does the entry configuration provide adequate maneuvering space for a person using a wheelchair? *Note: A person using a wheelchair needs 36 inches of clear width for forward movement, and a 5-foot diameter clear space or a T-shaped space to make turns. A minimum distance of 48 inches clear of the door swing is needed between the two doors of an entry vestibule.*	☐	☐	☐	☐ Rearrange furnishings such as chairs and trash cans. ☐ Remove inner door if there is a vestibule with two doors. ☐ Move or remove obstructing partitions. ☐ Note:
20. Is there a 36-inch-wide path to all fixtures?	☐	☐	☐	☐ Remove obstructions. ☐ Note:
21. Is the stall door operable with a closed fist, inside and out?	☐	☐	☐	☐ Replace inaccessible knobs with lever or loop handles. ☐ Add lever extensions. ☐ Note:
22. Is there a wheelchair-accessible stall that has an area of at least 5 feet by 5 feet, clear of the door swing, OR is there a stall that is less accessible but that provides greater access than a typical stall (either 36 by 69 inches or 48 by 69 inches)?	☐	☐	☐	☐ Move or remove partitions. ☐ Reverse the door swing if it is safe to do so. ☐ Note:
23. In the accessible stall, are there grab bars behind and on the side wall nearest to the toilet?	☐	☐	☐	☐ Add grab bars. ☐ Note:
24. Is the toilet seat 17 to 19 inches high?	☐	☐	☐	☐ Add raised seat. ☐ Note:
25. Does one lavatory have a 30-inch-wide by 48-inch-deep clear space in front? *Note: A maximum of 19 inches of the required depth may be under the lavatory.*	☐	☐	☐	☐ Rearrange furnishings. ☐ Replace lavatory. ☐ Remove or alter cabinetry to provide space underneath. Make sure hot pipes are covered. ☐ Move a partition or wall. ☐ Note:
26. Is the lavatory rim no higher than 34 inches?	☐	☐	☐	☐ Adjust or replace lavatory. ☐ Note:
27. Is there at least 29 inches from the floor to the bottom of the lavatory apron? (Excluding pipes)?	☐	☐	☐	☐ Adjust or replace lavatory. ☐ Note:
28. Can the faucet be operated with one closed fist?	☐	☐	☐	☐ Replace faucet handles with paddle type. ☐ Note:
29. Are soap and other dispensers and hand dryers within reach ranges (see page 7) and usable with one closed fist?	☐	☐	☐	☐ Lower dispensers. ☐ Replace with or provide additional accessible dispensers. ☐ Note:
30. Is the mirror mounted with the bottom edge of the reflecting surface 40 inches high or lower?	☐	☐	☐	☐ Lower or tilt down the mirror. ☐ Add a larger mirror anywhere in the room. ☐ Note:
Pit Toilets	**n/a**	**Yes**	**No**	**Pit Toilets**
31.				

☒ Check here if section does not apply to this park and move to next section.				
32. Is there a clear space of 60 inches by 60 inches adjacent to the toilet?	☐	☐	☐	☐ Repair as needed ☐ Note:
33. Does the height of the pit toilet riser comply with ADAAG 4.16.3?	☐	☐	☐	☐ Repair as needed ☐ Note:
34. Is the maneuvering space less than or equal to 1:50? (1:33 maximum allowed for drainage)	☐	☐	☐	☐ Repair as needed ☐ Note:
35. If the pit toilet has walls, are grab bars installed consistent with ADAAG 4.16.4?	☐	☐	☐	☐ Repair as needed ☐ Note:
36. Is the surface adjacent to the pit toilet firm and stable?	☐	☐	☐	☐ Repair as needed ☐ Note:
Utilities	**n/a**	**Yes**	**No**	**Utilities**
☒ Check here if section does not apply to this park and move to next section.				
37. Is the maneuvering space less than or equal to 1:50? (1:33 maximum allowed for drainage)	☐	☐	☐	☐ Repair as needed ☐ Note:
38. Is the surface adjacent to the utility firm and stable?	☐	☐	☐	☐ Repair as needed ☐ Note:
39. Are fixed water spouts located 28 inches minimum to 36 inches maximum above the ground or floor space?	☐	☐	☐	☐ Repair as needed ☐ Note:
40. Is the maneuvering space less than or equal to 1:50? (1:33 maximum allowed for drainage)	☐	☐	☐	☐ Repair as needed ☐ Note:
Drinking Fountains	**n/a**	**Yes**	**No**	**Drinking Fountains**
☐ Check here if section does not apply to this park and move to next section.				
41. Is there at least one fountain with clear floor space of at least 30 by 48 inches in front?	☐	☒	☐	☐ Clear more room by rearranging or removing furnishings. ☐ Note:
42. Is there one fountain with its spout no higher than 36 inches from the ground, and another with a standard height spout (or a single "hi-lo" fountain)?	☐	☒	☐	☐ Provide cup dispensers for fountains with spouts that are too high. ☐ Provide accessible water cooler. ☒ Note: **2nd fountain too high**
43. Are controls mounted on the front or on the side near the front edge, and operable with one closed fist?	☐	☒	☐	☐ Replace the controls. ☐ Note:
44. Is each water fountain cane-detectable (located within 27 inches off the floor or protruding less than 4 inches from the wall, into the circulation path?	☐	☐	☒	☐ Place a planter or other cane-detectable barrier on each side at floor level. ☐ Note: **Too high**
Telephones	**n/a**	**Yes**	**No**	**Telephones**
☒ Check here if section does not apply to this park and move to next section.				
45. If pay or public use phones are provided, is there clear floor space of at least 30 by 48 inches in front of at least one?	☐	☐	☐	☐ Move furnishings. ☐ Replace booth with open station. ☐ Note:
46. Is the highest operable part of the phone no higher than 48 inches (up to 54 inches if a side approach is possible)?	☐	☐	☐	☐ Lower telephone. ☐ Note:
47. Does the phone protrude no more than 4 inches into the circulation space?	☐	☐	☐	☐ Place a cane-detectable barrier on each side at floor level. ☐ Note:

48. Does the phone have push-button controls?	☐	☐	☐	☐ Contact phone company to install push-buttons. ☐ Note:
49. Is the phone hearing-aid compatible?	☐	☐	☐	☐ Contact phone company to replace with hearing-aid compatible phone. ☐ Note:
50. Is the phone adapted with volume control?	☐	☐	☐	☐ Contact the phone company to add volume control. ☐ Note:
51. Is the phone with volume control identified with appropriate signage?	☐	☐	☐	☐ Add signage. ☐ Note:
52. If there are four or more public phones in the building, is one of the phones equipped with a text telephone (TT or TDD)?	☐	☐	☐	☐ Install a text telephone. ☐ Have a portable text telephone available. ☐ Provide a shelf and outlet next to phone. ☐ Note:
53. Is the location of the text telephone identified by accessible signage bearing the International TDD Symbol?	☐	☐	☐	☐ Add signage. ☐ Note:

Directional and Informational Signage	**n/a**	**Yes**	**No**	**Directional and Informational Signage**
☒ Check here if section does not apply to this park and move to next section.				
54. If mounted about 80 inches, do they have letters at least 3 inches high, with high contrast, and non-glare finish?	☐	☐	☐	☐ Review requirements and replace signs as needed, meeting the requirements for character size, contrast, and finish. ☐ Note:
55. Do directional and informational signs comply with legibility requirements? 56. (Building directories or temporary signs need not comply.)	☐	☐	☐	☐ Review requirements and replace signs as needed, meeting the requirements for character size, contrast, and finish. ☐ Note:

Seats, Tables and Counters	**n/a**	**Yes**	**No**	**Seats, Tables and Counters**
☐ Check here if section does not apply to this park and move to next section.				
50. Are the spaces for wheelchair seating distributed throughout? (Cover or uncovered gathering areas, bleachers)	☐	☐	☒	☒ Rearrange tables to allow room for wheelchairs in seating areas throughout the area. ☐ Remove some fixed seating. ☐ Note:
51. If picnic tables are provided, are at least 50% and no less than two of the tables, accessible?	☐	☐	☒	☒ Replace as needed ☐ Note:
52. Are knee spaces at accessible picnic tables at least 27 inches high, 30 inches wide, and 19 inches deep?	☐	☐	☒	☒ Replace or raise tables. ☐ Note:
53. Are picnic tables spaced such that all areas of the table are accessible?	☐	☐	☒	☐ Rearrange tables to allow room for wheelchairs in seating areas throughout the area. ☐ Remove some fixed seating. ☒ Note: **Provide accessible routes**
54. At each type of cashier counter, is there a portion of the main counter that is no more than 36 inches high?	☒	☐	☐	☐ Provide a lower auxiliary counter or folding shelf. ☐ Arrange the counter and surrounding furnishings to create a space to hand items back and forth.

				☐ Note:
55. Is there a portion of food-ordering counters that is no more than 36 inches high, or is there space at the side for passing items to customers who have difficulty reaching over a high counter?	☐	☐	☐	☐ Lower section of counter. ☐ Arrange the counter and surrounding furnishings to create a space to pass items. ☐ Note:
Fire Rings	**n/a**	**Yes**	**No**	**Fire Rings**
☒ Check here if section does not apply to this park and move to next section.				
56. Do all fire rings have a clear space extending a minimum 48" deep by 48" wide at all usable portions of the ring?	☐	☐	☐	☐ Install clear spaces as needed ☐ Note:
57. Are the clear spaces around the fire pit on a firm and stable surface?	☐	☐	☐	☐ Correct as needed ☐ Note:
58. Is the fire surface height a minimum of 9" above the ground/floor?	☐	☐	☐	☐ Construct or renovate pits to meet clearances ☐ Note:
59. Are the slopes around fire pits not more than 1:50?	☐	☐	☐	☐ Construct or renovate pits to meet clearances ☐ Note:
Cooking Surfaces, Grills, Pedestal Grills[2]	**n/a**	**Yes**	**No**	**Cooking Surfaces, Grills, Pedestal Grills**
☒ Check here if section does not apply to this park and move to next section.				
60. Are accessible cooking features dispersed throughout the area and among the types provided?	☐	☐	☐	☐ Evenly disperse cooking features ☐ Note:
61. Are accessible cooking feature surfaces installed between 15 inches and 34 inches above the ground/floor?	☐	☐	☐	☐ Install as required ☐ Note:
62. Do operating controls and mechanisms comply with current ADAAG 4.27.1 (General) 4.27.2 (Clear Floor Space and 4.27.3 (Height)?	☐	☐	☐	☐ Install as required ☐ Note:
Fixed Trash/Recycling Containers	**n/a**	**Yes**	**No**	**Fixed Trash/Recycling Containers**
☒ Check here if section does not apply to this park and move to next section.				
63. Are trash and recycling containers accessible and do they comply with ADAAG 4.27?	☐	☐	☐	☐ Replace as needed ☐ Note:
Overlooks/Viewing Areas	**n/a**	**Yes**	**No**	**Overlooks/Viewing Areas**
☒ Check here if section does not apply to this park and move to next section.				
64. Are all viewing areas on an accessible route?	☐	☐	☐	☐ Install accessible paths as needed ☐ Note:
65. Are all viewing areas constructed to provide an unobstructed view?	☐	☐	☐	☐ Repair as needed ☐ Note:
66. Is there at least one maneuvering space that complies with ADAAG 4.2.3?	☐	☐	☐	☐ Repair as needed ☐ Note:
67. Is the ground surface firm and stable?	☐	☐	☐	☐ Repair as needed ☐ Note:
68. Is the maneuvering space less than or	☐	☐	☐	☐ Repair as needed

[2] Where there is only one cooking surface, grill or pedestal grill in a provided picnic area, it shall be accessible. Where multiple cooking features are provided in a picnic area, 50 percent, but no less than 2 shall be accessible.

equal to 1:50? (1:33 maximum allowed for drainage)				☐ Note:
Telescopes/Periscopes	**n/a**	**Yes**	**No**	**Telescopes/Periscopes**
☒ Check here if section does not apply to this park and move to next section.				
69. Are at least 20%, but not less than one, telescope or periscope that complies with ADAAG 4.27?	☐	☐	☐	☐ Repair as needed ☐ Note:
70. Are the eye pieces usable from a seated position?	☐	☐	☐	☐ Repair as needed ☐ Note:
71. Is the ground surface firm and stable?	☐	☐	☐	☐ Repair as needed ☐ Note:
72. Is the maneuvering space less than or equal to 1:50? (1:33 maximum allowed for drainage)	☐	☐	☐	☐ Repair as needed ☐ Note:
Benches	**n/a**	**Yes**	**No**	**Benches**
☒ Check here if section does not apply to this park and move to next section.				
73. Where multiple benches are provided, are at least 50% consistent with this section?	☐	☐	☐	☐ Repair as needed ☐ Note: **only 1 bench**
74. Are accessible benches dispersed evenly throughout the park?	☐	☐	☐	☐ Disperse benches evenly throughout the park ☐ Note: just at play area
75. Of the accessible benches that are provided, do at least 50% of those benches have armrests consistent with ADAAG 4.26.3?	☐	☐	☐	☐ Repair as needed ☐ Note:
76. Are the front edges of accessible benches between 17 and 19 inches maximum above the ground/floor?	☐	☐	☐	☐ Repair as needed ☐ Note:
77. Are floor spaces adjacent to benches consistent with ADAAG 4.2.4?	☐	☐	☐	☐ Repair as needed ☐ Note:
78. Is the ground/floor surface around the accessible benches firm and stable?	☐	☐	☐	☐ Repair as needed ☐ Note:
79. Do all accessible benches have back support the full length of the bench?	☐	☐	☐	☐ Repair as needed ☐ Note:
Playground Equipment Accessibility	**n/a**	**Yes**	**No**	**Playground Equipment Accessibility**
☐ Check here if section does not apply to this park and move to next section.				
80. Is there at least one of each play component on an accessible route[3]?	☐	☐	☒	☐ Expand existing accessible routes as needed ☒ Construct accessible routes ☐ Note: **needs paved trail route**
81. Is there at least one of each ground-level play component on an accessible route?	☐	☐	☒	☐ Expand existing accessible routes as needed ☒ Construct accessible routes ☐ Note:
82. Are the play components integrated for use by all children; including those with disabilities?	☐	☐	☒	☒ Ensure play components on accessible routes can be used by all children ☐ Note:
Trails	**n/a**	**Yes**	**No**	**Trails**

[3] Different types of play components are based on the general experience provided by the play component. Different types include, but are no limited to, rocking, swinging, climbing, spinning and sliding. Components may be elevated or at or below ground level.

☐ Check here if section does not apply to this park and move to next section.				
83. Is the clear width of the trail 36 inches?	☐	☒	☐	☐ Renovate as required ☐ Construct all new trails to code ☐ Note:
84. Are openings in the trail less than ½ inch? *Note: (Board slat spaces, etc. – Elongated openings should be placed so that the long dimension is perpendicular or diagonal to the dominate direction of travel.)*	☐	☐	☒	☒ Renovate as required ☐ Construct all new trails to code ☒ Note: **Aging asphalt needs repair**
85. Is the trail free of constructed or natural barriers?	☐	☒	☐	☐ Remove as needed ☐ Note:
86. Are all overhead hazards maintained at a height that is sufficient for all expected users of the trail? (Remember, Objects that protrude into a pathway at a height greater than 27" are difficult for the blind or persons with visual disabilities who use canes to detect.)	☐	☒	☐	☐ Renovate as required ☐ Construct all new trails to code ☐ Note:
87. Is there a segment in the trail that has a 10% grade for more than 30 feet?	☐	☐	☒	☐ Construct level rest interval[4] ☐ Note:
88. Are all cross slopes a maximum of 3%?	☐	☒	☐	☐ Renovate as required ☐ Construct all new trails to code ☐ Note:
89. Are all tread obstacles a maximum of 1"?	☐	☐	☐	☐ Renovate as required ☐ Construct all new trails to code ☐ Note:
90. Are passing spaces (6" x 60") provided at maximum intervals of 200 ft. whenever the clear tread width is less then 60"?	☒	☐	☐	☐ Renovate as required ☐ Construct all new trails to code ☐ Note:
91. Does the trail have or require edge protection?	☐	☐	☒	☐ Renovate as required – Where provided, edge protection should be a minimum of 3". ☐ Construct all new trails to code ☐ Note:
92. Does the trail have signs that clearly indicate the type of use, rules and difficult conditions for the trail?	☐	☐	☒	☐ Renovate as required ☐ Construct all new trails to code ☐ Note:
93. Are there signs that warn users that changes in trail level or tread obstacles could not be removed?	☐	☐	☒	☐ Renovate as required ☐ Construct all new trails to code ☐ Note:
94. Are there detectable warnings anywhere a route crosses a traffic way?	☐	☐	☒	☐ Repair as needed ☐ Note:
Shooting Facilities	**n/a**	**Yes**	**No**	**Shooting Facilities**
☒ Check here if section does not apply to this park and move to next section.				
95. Does the English Pit range have 60-inch diameter space with slopes not steeper than 1:48 so a wheelchair can turn around?	☐	☐	☐	☐ Renovate as needed ☐ Install accessible seating area ☐ Note
96. Do the firing benches have a wheelchair	☐	☐	☐	☐ Renovate as needed

[4] Resting intervals must be 60" minimum on length and at least as wide as the widest portion of the trail segment leading to the resting interval with a cross slope that does not exceed 3%.

accessible area with a bench between 27 and 34 inches with a minimum of 19" leg space?				☐ Install accessible seating area ☐ Note
97. If fixed firing positions are provided, at least 5% but not less than one of each type of firing position, must be served by an accessible route. Does English Pit have an accessible route?	☐	☐	☐	☐ Renovate as needed ☐ Install accessible route ☐ Note
98. Does the park have accessible routes to all target impact areas?	☐	☐	☐	☐ Expand existing accessible routes as needed ☐ Construct accessible routes ☐ Note:
Aquatic Recreation Facilities	**n/a**	**Yes**	**No**	**Aquatic Recreation Facilities**
☒ Check here if section does not apply to this park and move to next section.				
99. Is there an accessible route (36" wide) over beach areas that allow access to the water's edge?	☐	☐	☐	☐ Renovate as needed ☐ Install accessible route ☐ Note
100. Are there accessible routes with handrails that lead into designated swim areas such as ponds, lakes, etc.	☐	☐	☐	☐ Renovate as needed ☐ Install accessible route ☐ Note
Fishing piers and Platforms	**n/a**	**Yes**	**No**	**Fishing piers and Platforms**
☒ Check here if section does not apply to this park and move to next section.				
101. Does this park have a facility specifically designed and constructed for fishing?	☐	☐	☐	(Structures that were not built specifically for fishing do not need to meet ADAAG guidelines. Structures designed as fishing piers or platforms, must have an accessible route.)
102. Does the park have a gangway serving the fishing pier or platform?	☐	☐	☐	☐ Install a gangway platform – Gangway 1:12 maximum slope or at least 30 feet long. ☐ Renovate existing platform to meet code (Check specific building codes) ☐ Note
103. Does the gangway have a transition plate to the pier or platform that meets code?	☐	☐	☐	☐ Install a transition plate[5] ☐ Adjust existing transition plate to meet code ☐ Note
104. Does the gangway have handrails?	☐	☐	☐	☐ Install handrail to meet code ☐ Ensure existing rails meet code ☐ Note
105. Does the fishing pier or platform have railings, guards or handrails[6]?	☐	☐	☐	☐ Install as needed ☐ Renovate existing structure to meet code ☐ Note
106. Does the fishing pier or platform have edge protection[i]?	☐	☐	☐	☐ Install ☐ Renovate existing edge protection ☐ Note

[5] Gangways are not required to have to have landings at the end, if transition plates are provided. If the slope of the transition plate is greater that 1: 20 (5%), the transition plates must have a landing at the end of the transition plate not connected to the gangway and must comply with other ramp requirements.

[6] Where railings, guards or handrails are provided on a fishing pier or platform, at least 25 % of the rails must be 34 inches or less in height above the ground or dock so accommodate a person in a wheelchair. These railings must be dispersed as equally as possible to all areas of the fishing pier.

107. Does the fishing pier or platform have clear floor or ground space[ii]?	☐	☐	☐	☐ Install ☐ Renovate existing edge protection ☐ Note
108. Does the fishing pier or platform have sufficient turning space[iii]?	☐	☐	☐	☐ Install ☐ Renovate existing edge protection ☐ Note
Boating Facilities	**n/a**	**Yes**	**No**	**Boating Facilities**
☒ Check here if section does not apply to this park and move to next section.				
109. Is there an accessible route to the boating facilities?	☐	☐	☐	☐ Install ☐ Renovate existing route ☐ Note
110. Does the gangway to the dock or floating dock deigned to provide for a maximum 1:12 (8.33%) slope ? *Note: Not required to be longer than 80 feet. (Elevators may be used in lieu of gangways) In smaller facilities with less than 25 boat slips, the slope of the gangway may exceed 1:12, if the gangway is at least 30 feet long.*	☐	☐	☐	☐ Install ☐ Renovate existing route ☐ Note
111. Does the gangway have a transition plate to the pier or platform that meets code[iv]?	☐	☐	☐	☐ Install a transition plate ☐ Adjust existing transition plate to meet code ☐ Note

<table>
<tr>
<td>112. Where boat slips[7] are provided, does the number of accessible slips[8] comply with the table to the right?
Note: If boat slips at a facility are not identified or demarcated by length, each 40 feet of boat slip edge along the perimeter of a pier will be counted as one boat slip</td>
<td>☐</td>
<td>☐</td>
<td>☐</td>
<td>
<table>
<tr><th colspan="2">Number of Accessible Boat Slips Required</th></tr>
<tr><td>Total Slips in Facility</td><td>Minimum Accessible Slips</td></tr>
<tr><td>1-25</td><td>1</td></tr>
<tr><td>26-50</td><td>2</td></tr>
<tr><td>50-100</td><td>3</td></tr>
<tr><td>101-150</td><td>4</td></tr>
</table>
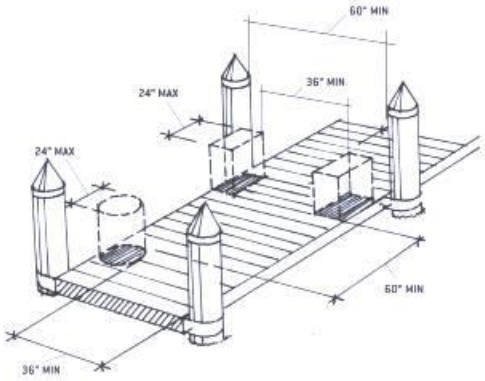

PIER CLEARANCE SPACE REDUCTION
</td>
</tr>
<tr>
<td>If the facility only has a boarding pier (see footnote # 9) at least 5% but not less than, must comply with these guidelines. The entire length of accessible boarding piers must comply with the same provisions that apply to slips.

113. Does this facility meet this regulation?</td>
<td>☐</td>
<td>☐</td>
<td>☐</td>
<td>☐ Install
☐ Renovate boarding pier
☐ Note</td>
</tr>
<tr>
<td>114. Is this facility compromised only of a boat launch with no boarding ramp or pier?</td>
<td>☐</td>
<td>☐</td>
<td>☐</td>
<td>If yes, there are no specific provisions that address access to launch ramps without boarding piers.</td>
</tr>
</table>

[7] A boat slip is the portion of a pier, main pier, finger pier, or float where a boat is berthed or moored, or used for embarking or disembarking. Boarding piers that are not part of a boat launch ramp are classified as “boat slips” for the purpose of this survey.

[8] Accessible boat slips must have clear pier space at least 60 inches wide and as long as the slip. Every 10 feet of linear pier edge serving the accessible slips must have at least one continuous clear opening that is at least 60 inches wide. The width of the clear pier space may be 36 inches wide for a length of 24 inches, as long as multiple 36-inch segments are separated by segments that are 60 inches minimum clear in width and 60 inches minimum clear in length, and the clear openings are at least 60 inches deep. Edge protection is not required

Item Number	Notes

4.2.3* Wheelchair Turning Space. The space required for a wheelchair to make a 180-degree turn is a clear space of 60 in (1525 mm) diameter (see Fig. 3(a)) or a T-shaped space (see Fig. 3(b)). Appendix Note

4.2.4* Clear Floor or Ground Space for Wheelchairs.

4.2.4.1 Size and Approach. The minimum clear floor or ground space required to accommodate a single, stationary wheelchair and occupant is 30 in by 48 in (760 mm by 1220 mm) (see Fig. 4(a)). The minimum clear floor or ground space for wheelchairs may be positioned for forward or parallel approach to an object (see Fig. 4(b) and (c)). Clear floor or ground space for wheelchairs may be part of the knee space required under some objects.

4.2.4.2 Relationship of Maneuvering Clearance to Wheelchair Spaces. One full unobstructed side of the clear floor or ground space for a wheelchair shall adjoin or overlap an accessible route or adjoin another wheelchair clear floor space. If a clear floor space is located in an alcove or otherwise confined on all or part of three sides, additional maneuvering clearances shall be provided as shown in Fig. 4(d) and (e).

4.2.4.3 Surfaces for Wheelchair Spaces. Clear floor or ground spaces for wheelchairs shall comply with 4.5. Appendix Note

4.16.3* Height. The height of water closets shall be 17 in to 19 in (430 mm to 485 mm), measured to the top of the toilet seat (see Fig. 29(b)). Seats shall not be sprung to return to a lifted position. Appendix Note

4.16.4* Grab Bars. Grab bars for water closets not located in stalls shall comply with 4.26 and Fig. 29. The grab bar behind the water closet shall be 36 in (915 mm) minimum. Appendix Note

4.26.3 Structural Strength. The structural strength of grab bars, tub and shower seats, fasteners, and mounting devices shall meet the following specification:

(1) Bending stress in a grab bar or seat induced by the maximum bending moment from the application of 250 lbf (1112N) shall be less than the allowable stress for the material of the grab bar or seat.

(2) Shear stress induced in a grab bar or seat by the application of 250 lbf (1112N) shall be less than the allowable shear stress for the material of the grab bar or seat. If the connection between the grab bar or seat and its mounting bracket or other support is considered to be fully restrained, then direct and torsional shear stresses shall be totaled for the combined shear stress, which shall not exceed the allowable shear stress.

(3) Shear force induced in a fastener or mounting device from the application of 250 lbf (1112N) shall be less than the allowable lateral load of either the fastener or mounting device or the supporting structure, whichever is the smaller allowable load.

(4) Tensile force induced in a fastener by a direct tension force of 250 lbf (1112N) plus the maximum moment from the application of 250 lbf (1112N) shall be less than the allowable withdrawal load between the fastener and the supporting structure.

(5) Grab bars shall not rotate within their fittings.

4.27 Controls and Operating Mechanisms.

4.27.1 General. Controls and operating mechanisms required to be accessible by 4.1 shall comply with 4.27.

4.27.2 Clear Floor Space. Clear floor space complying with 4.2.4 that allows a forward or a parallel approach by a person using a wheelchair shall be provided at controls, dispensers, receptacles, and other operable equipment.

4.27.3* Height. The highest operable part of controls, dispensers, receptacles, and other operable equipment shall be placed within at least one of the reach ranges specified in 4.2.5 and 4.2.6. Electrical and communications system receptacles on walls shall be mounted no less than 15 in (380 mm) above the floor. Appendix Note

EXCEPTION: These requirements do not apply where the use of special equipment dictates otherwise or where electrical and communications systems receptacles are not normally intended for use by building occupants.

4.27.4 Operation. Controls and operating mechanisms shall be operable with one hand and shall not require tight grasping, pinching, or twisting of the wrist. The force required to activate controls shall be no greater than 5 lbf (22.2 N).

---

[i] Where railings, guards or handrails are provided, edge protection must be provided and extended a minimum of 2 inches above the ground or deck surface. Edge protection is not required where a railing, guardrail or handrail is provided, if the deck surface extends a minimum of 12 inches beyond the inside face of the railing.

[ii] At least one clear floor or ground space (30 inches by 48 inches) must be provided at each location that has a railing height of 34 inches maximum. If there is no railing, at least one clear space must be provided on a pier or platform.

[iii] Fishing piers and platforms must have at least one turning area, either 60-inch turning space or a T-shaped space to allow a person using a mobility device or wheelchair to make a 180-degree turn.

[iv] Gangways are not required to have to have landings at the end, if transition plates are provided. If the slope of the transition plate is greater that 1: 20 (5%), the transition plates must have a landing at the end of the transition plate not connected to the gangway and must comply with other ramp requirements.

ADA Compliance Program

MEDFORD PARKS AND RECREATION DEPARTMENT

ADA ACCESSIBILITY SURVEY FOR PARK FACILITIES

Date: April 13, 2016 **Estimated Cost:**

Facility: Kennedy Park **Department Notified:**

Survey by: Jean Akers **Date of Notification:**

Check all applicable building codes and ADAAG publications prior to any renovation or construction. This survey is only a guideline.

ITEM				RECOMMENDATIONS
Accessible Routes[1]	**n/a**	**Yes**	**No**	**Accessible Routes**
☐ Check here if section does not apply to this park and move to next section.				
1. Does the park have accessible routes to all accessible facilities within the park?	☐	☒	☐	☐ Expand existing accessible routes as needed ☐ Construct accessible routes ☐ Note:
2. Where court sports are provided (i.e. tennis, basketball, and volleyball) are there accessible routes to each court? (Routes must connect both sides of the court)	☒	☐	☐	☐ Expand existing accessible routes as needed ☐ Construct accessible routes ☐ Note:
3. Are there accessible routes to any and all animal containment areas?	☒	☐	☐	☐ Expand existing accessible routes as needed ☐ Construct accessible routes ☐ Note:
4. Are there detectable warnings anywhere a route crosses a traffic way?	☐	☐	☒	☒ Repair as needed ☐ Note: Add at Springbrook Rd entry
ITEM				**RECOMMENDATIONS**
Parking and Drop-off Areas	**n/a**	**Yes**	**No**	**Parking and Drop-off Areas**
☒ Check here if section does not apply to this park and move to next section.				
5. Are an adequate number of accessible parking spaces available? The table below gives the ADAAG requirement for new construction and alterations (for lots with more than 100 spaces refer to ADAAG). Accessible Spaces per Overall spaces Total Spaces — Accessible Spaces Required 1 to 25 — 1 space 26 to 50 — 2 spaces 51 to 75 — 3 spaces 76 to 100 — 4 spaces	☐	☐	☐	☐ Reconfigure a reasonable number of spaces by repainting stripes. ☐ Construct accessible routes ☐ Note:

[1] Accessible routes must comply with ADAAG provisions for the location, width (minimum 36 inches) passing space, head room, surface, slope (Maximum 1:12 (or 8.33%). Accessible routes must connect all accessible elements within the facility. Accessible routes must be stable, firm and slip resistant. There is no requirement to change the surface of a playing field to an accessible surface.

6. Are an adequate number of van accessible spaces provided? At least 1 of every 8 accessible spaces must be van-accessible (with a minimum of 1 van-accessible space in all cases.)	☐	☐	☐	☐ Reconfigure to provide van-accessible space(s).
7. Are the access aisles part of the accessible route?	☐	☐	☐	☐ Add curb ramps. ☐ Reconstruct sidewalk
8. Are the accessible spaces closest to the accessible entrance?	☐	☐	☐	☐ Reconfigure spaces.
9. Are accessible spaces marked with and International Symbol of Accessibility? Are there signs reading "Van Accessible" at van spaces?	☐	☐	☐	☐ Add signs, placed so that they are not obstructed by cars.
10. Is there an enforcement procedure to ensure that accessible parking is used only by those who need it?	☐	☐	☐	☐ Implement a policy to check periodically for violators and report them to the proper authorities.
Team Player Seating Areas	**n/a**	**Yes**	**No**	**Team Player Seating Areas**
☒ Check here if section does not apply to this park and move to next section.				
11. Do fixed team or player seating areas contain the required number of wheelchair spaces and companion seats required by ADAAG?	☐	☐	☐	☐ Renovate as needed ☐ Install accessible seating area ☐ Note
Restrooms	**n/a**	**Yes**	**No**	**Restrooms**
☒ Check here if section does not apply to this park and move to next section.				
12. If rest rooms are available to the public, is at least one rest room (either one for each sex, or unisex) fully accessible?	☐	☐	☐	☐ Reconfigure rest room. ☐ Combine rest rooms to create one unisex accessible rest room. ☐ Note:
13. Are there signs at inaccessible rest rooms that give directions to accessible ones?	☐	☐	☐	☐ Install accessible signs. ☐ Note:
14. Is there tactile signage identifying rest rooms? *Note: Mount signs on the wall, on the latch side of the door, complying with the permanent signage.*	☐	☐	☐	☐ Add accessible signage, placed to the side of the door, 60 inches to centerline (not on the door itself). ☐ If symbols are used, add supplementary verbal signage. ☐ Note:
15. Are pictograms or symbols used to identify rest rooms, and, if used, are raised characters and braille included below?	☐	☐	☐	☐ If symbols are used, add supplementary verbal signage with raised characters and braille below pictogram symbol. ☐ Note:
16. Is the doorway at least 32 inches clear?	☐	☐	☐	☐ Install offset (swing-clear) hinges. ☐ Widen the doorway. ☐ Note:
17. Are doors equipped with accessible handles (operable with a closed fist), 48 inches high or less?	☐	☐	☐	☐ Lower handles. ☐ Replace knobs or latches with lever or loop handles. ☐ Add lever extensions. ☐ Install power-assisted or automatic door openers. ☐ Note:

18. Can doors be opened easily (5 lbf maximum force)?	☐	☐	☐	☐ Adjust or replace closers. ☐ Install lighter doors. ☐ Install power-assisted or automatic door openers. ☐ Note:
19. Does the entry configuration provide adequate maneuvering space for a person using a wheelchair? *Note: A person using a wheelchair needs 36 inches of clear width for forward movement, and a 5-foot diameter clear space or a T-shaped space to make turns. A minimum distance of 48 inches clear of the door swing is needed between the two doors of an entry vestibule.*	☐	☐	☐	☐ Rearrange furnishings such as chairs and trash cans. ☐ Remove inner door if there is a vestibule with two doors. ☐ Move or remove obstructing partitions. ☐ Note:
20. Is there a 36-inch-wide path to all fixtures?	☐	☐	☐	☐ Remove obstructions. ☐ Note:
21. Is the stall door operable with a closed fist, inside and out?	☐	☐	☐	☐ Replace inaccessible knobs with lever or loop handles. ☐ Add lever extensions. ☐ Note:
22. Is there a wheelchair-accessible stall that has an area of at least 5 feet by 5 feet, clear of the door swing, OR is there a stall that is less accessible but that provides greater access than a typical stall (either 36 by 69 inches or 48 by 69 inches)?	☐	☐	☐	☐ Move or remove partitions. ☐ Reverse the door swing if it is safe to do so. ☐ Note:
23. In the accessible stall, are there grab bars behind and on the side wall nearest to the toilet?	☐	☐	☐	☐ Add grab bars. ☐ Note:
24. Is the toilet seat 17 to 19 inches high?	☐	☐	☐	☐ Add raised seat. ☐ Note:
25. Does one lavatory have a 30-inch-wide by 48-inch-deep clear space in front? *Note: A maximum of 19 inches of the required depth may be under the lavatory.*	☐	☐	☐	☐ Rearrange furnishings. ☐ Replace lavatory. ☐ Remove or alter cabinetry to provide space underneath. Make sure hot pipes are covered. ☐ Move a partition or wall. ☐ Note:
26. Is the lavatory rim no higher than 34 inches?	☐	☐	☐	☐ Adjust or replace lavatory. ☐ Note:
27. Is there at least 29 inches from the floor to the bottom of the lavatory apron? (Excluding pipes)?	☐	☐	☐	☐ Adjust or replace lavatory. ☐ Note:
28. Can the faucet be operated with one closed fist?	☐	☐	☐	☐ Replace faucet handles with paddle type. ☐ Note:
29. Are soap and other dispensers and hand dryers within reach ranges (see page 7) and usable with one closed fist?	☐	☐	☐	☐ Lower dispensers. ☐ Replace with or provide additional accessible dispensers. ☐ Note:
30. Is the mirror mounted with the bottom edge of the reflecting surface 40 inches high or lower?	☐	☐	☐	☐ Lower or tilt down the mirror. ☐ Add a larger mirror anywhere in the room. ☐ Note:
Pit Toilets	**n/a**	**Yes**	**No**	**Pit Toilets**
31.				

☒ Check here if section does not apply to this park and move to next section.				
32. Is there a clear space of 60 inches by 60 inches adjacent to the toilet?	☐	☐	☐	☐ Repair as needed ☐ Note:
33. Does the height of the pit toilet riser comply with ADAAG 4.16.3?	☐	☐	☐	☐ Repair as needed ☐ Note:
34. Is the maneuvering space less than or equal to 1:50? (1:33 maximum allowed for drainage)	☐	☐	☐	☐ Repair as needed ☐ Note:
35. If the pit toilet has walls, are grab bars installed consistent with ADAAG 4.16.4?	☐	☐	☐	☐ Repair as needed ☐ Note:
36. Is the surface adjacent to the pit toilet firm and stable?	☐	☐	☐	☐ Repair as needed ☐ Note:
Utilities	**n/a**	**Yes**	**No**	**Utilities**
☒ Check here if section does not apply to this park and move to next section.				
37. Is the maneuvering space less than or equal to 1:50? (1:33 maximum allowed for drainage)	☐	☐	☐	☐ Repair as needed ☐ Note:
38. Is the surface adjacent to the utility firm and stable?	☐	☐	☐	☐ Repair as needed ☐ Note:
39. Are fixed water spouts located 28 inches minimum to 36 inches maximum above the ground or floor space?	☐	☐	☐	☐ Repair as needed ☐ Note:
40. Is the maneuvering space less than or equal to 1:50? (1:33 maximum allowed for drainage)	☐	☐	☐	☐ Repair as needed ☐ Note:
Drinking Fountains	**n/a**	**Yes**	**No**	**Drinking Fountains**
☒ Check here if section does not apply to this park and move to next section.				
41. Is there at least one fountain with clear floor space of at least 30 by 48 inches in front?	☐	☐	☐	☐ Clear more room by rearranging or removing furnishings. ☐ Note:
42. Is there one fountain with its spout no higher than 36 inches from the ground, and another with a standard height spout (or a single "hi-lo" fountain)?	☐	☐	☐	☐ Provide cup dispensers for fountains with spouts that are too high. ☐ Provide accessible water cooler. ☐ Note:
43. Are controls mounted on the front or on the side near the front edge, and operable with one closed fist?	☐	☐	☐	☐ Replace the controls. ☐ Note:
44. Is each water fountain cane-detectable (located within 27 inches off the floor or protruding less than 4 inches from the wall, into the circulation path?	☐	☐	☐	☐ Place a planter or other cane-detectable barrier on each side at floor level. ☐ Note:
Telephones	**n/a**	**Yes**	**No**	**Telephones**
☒ Check here if section does not apply to this park and move to next section.				
45. If pay or public use phones are provided, is there clear floor space of at least 30 by 48 inches in front of at least one?	☐	☐	☐	☐ Move furnishings. ☐ Replace booth with open station. ☐ Note:
46. Is the highest operable part of the phone no higher than 48 inches (up to 54 inches if a side approach is possible)?	☐	☐	☐	☐ Lower telephone. ☐ Note:
47. Does the phone protrude no more than 4 inches into the circulation space?	☐	☐	☐	☐ Place a cane-detectable barrier on each side at floor level. ☐ Note:

48. Does the phone have push-button controls?	☐	☐	☐	☐ Contact phone company to install push-buttons. ☐ Note:
49. Is the phone hearing-aid compatible?	☐	☐	☐	☐ Contact phone company to replace with hearing-aid compatible phone. ☐ Note:
50. Is the phone adapted with volume control?	☐	☐	☐	☐ Contact the phone company to add volume control. ☐ Note:
51. Is the phone with volume control identified with appropriate signage?	☐	☐	☐	☐ Add signage. ☐ Note:
52. If there are four or more public phones in the building, is one of the phones equipped with a text telephone (TT or TDD)?	☐	☐	☐	☐ Install a text telephone. ☐ Have a portable text telephone available. ☐ Provide a shelf and outlet next to phone. ☐ Note:
53. Is the location of the text telephone identified by accessible signage bearing the International TDD Symbol?	☐	☐	☐	☐ Add signage. ☐ Note:

Directional and Informational Signage	**n/a**	**Yes**	**No**	**Directional and Informational Signage**
☐ Check here if section does not apply to this park and move to next section.				
54. If mounted about 80 inches, do they have letters at least 3 inches high, with high contrast, and non-glare finish?	☐	☐	☐	☒ Review requirements and replace signs as needed, meeting the requirements for character size, contrast, and finish. ☐ Note:
55. Do directional and informational signs comply with legibility requirements? 56. (Building directories or temporary signs need not comply.)	☐	☐	☐	☒ Review requirements and replace signs as needed, meeting the requirements for character size, contrast, and finish. ☐ Note:

Seats, Tables and Counters	**n/a**	**Yes**	**No**	**Seats, Tables and Counters**
☐ Check here if section does not apply to this park and move to next section.				
50. Are the spaces for wheelchair seating distributed throughout? (Cover or uncovered gathering areas, bleachers)	☐	☐	☒	☐ Rearrange tables to allow room for wheelchairs in seating areas throughout the area. ☐ Remove some fixed seating. ☐ Note:
51. If picnic tables are provided, are at least 50% and no less than two of the tables, accessible?	☐	☐	☒	☐ Replace as needed ☒ Note: **only one picnic table in grass**
52. Are knee spaces at accessible picnic tables at least 27 inches high, 30 inches wide, and 19 inches deep?	☐	☐	☒	☐ Replace or raise tables. ☐ Note:
53. Are picnic tables spaced such that all areas of the table are accessible?	☐	☐	☒	☐ Rearrange tables to allow room for wheelchairs in seating areas throughout the area. ☐ Remove some fixed seating. ☐ Note:
54. At each type of cashier counter, is there a portion of the main counter that is no more than 36 inches high?	☒	☐	☐	☐ Provide a lower auxiliary counter or folding shelf. ☐ Arrange the counter and surrounding furnishings to create a space to hand items back and forth.

				☐ Note:
55. Is there a portion of food-ordering counters that is no more than 36 inches high, or is there space at the side for passing items to customers who have difficulty reaching over a high counter?	☒	☐	☐	☐ Lower section of counter. ☐ Arrange the counter and surrounding furnishings to create a space to pass items. ☐ Note:
Fire Rings	**n/a**	**Yes**	**No**	**Fire Rings**
☒ Check here if section does not apply to this park and move to next section.				
56. Do all fire rings have a clear space extending a minimum 48" deep by 48" wide at all usable portions of the ring?	☐	☐	☐	☐ Install clear spaces as needed ☐ Note:
57. Are the clear spaces around the fire pit on a firm and stable surface?	☐	☐	☐	☐ Correct as needed ☐ Note:
58. Is the fire surface height a minimum of 9" above the ground/floor?	☐	☐	☐	☐ Construct or renovate pits to meet clearances ☐ Note:
59. Are the slopes around fire pits not more than 1:50?	☐	☐	☐	☐ Construct or renovate pits to meet clearances ☐ Note:
Cooking Surfaces, Grills, Pedestal Grills[2]	**n/a**	**Yes**	**No**	**Cooking Surfaces, Grills, Pedestal Grills**
☒ Check here if section does not apply to this park and move to next section.				
60. Are accessible cooking features dispersed throughout the area and among the types provided?	☐	☐	☐	☐ Evenly disperse cooking features ☐ Note:
61. Are accessible cooking feature surfaces installed between 15 inches and 34 inches above the ground/floor?	☐	☐	☐	☐ Install as required ☐ Note:
62. Do operating controls and mechanisms comply with current ADAAG 4.27.1 (General) 4.27.2 (Clear Floor Space and 4.27.3 (Height)?	☐	☐	☐	☐ Install as required ☐ Note:
Fixed Trash/Recycling Containers	**n/a**	**Yes**	**No**	**Fixed Trash/Recycling Containers**
☒ Check here if section does not apply to this park and move to next section.				
63. Are trash and recycling containers accessible and do they comply with ADAAG 4.27?	☐	☐	☐	☐ Replace as needed ☐ Note:
Overlooks/Viewing Areas	**n/a**	**Yes**	**No**	**Overlooks/Viewing Areas**
☒ Check here if section does not apply to this park and move to next section.				
64. Are all viewing areas on an accessible route?	☐	☐	☐	☐ Install accessible paths as needed ☐ Note:
65. Are all viewing areas constructed to provide an unobstructed view?	☐	☐	☐	☐ Repair as needed ☐ Note:
66. Is there at least one maneuvering space that complies with ADAAG 4.2.3?	☐	☐	☐	☐ Repair as needed ☐ Note:
67. Is the ground surface firm and stable?	☐	☐	☐	☐ Repair as needed ☐ Note:
68. Is the maneuvering space less than or	☐	☐	☐	☐ Repair as needed

[2] Where there is only one cooking surface, grill or pedestal grill in a provided picnic area, it shall be accessible. Where multiple cooking features are provided in a picnic area, 50 percent, but no less than 2 shall be accessible.

equal to 1:50? (1:33 maximum allowed for drainage)				☐ Note:
Telescopes/Periscopes	**n/a**	**Yes**	**No**	**Telescopes/Periscopes**
☒ Check here if section does not apply to this park and move to next section.				
69. Are at least 20%, but not less than one, telescope or periscope that complies with ADAAG 4.27?	☐	☐	☐	☐ Repair as needed ☐ Note:
70. Are the eye pieces usable from a seated position?	☐	☐	☐	☐ Repair as needed ☐ Note:
71. Is the ground surface firm and stable?	☐	☐	☐	☐ Repair as needed ☐ Note:
72. Is the maneuvering space less than or equal to 1:50? (1:33 maximum allowed for drainage)	☐	☐	☐	☐ Repair as needed ☐ Note:
Benches	**n/a**	**Yes**	**No**	**Benches**
☐ Check here if section does not apply to this park and move to next section.				
73. Where multiple benches are provided, are at least 50% consistent with this section?	☐	☐	☒	☐ Repair as needed ☐ Note: **6 benches, all in grass**
74. Are accessible benches dispersed evenly throughout the park?	☒	☐	☐	☐ Disperse benches evenly throughout the park ☐ Note: just at play area
75. Of the accessible benches that are provided, do at least 50% of those benches have armrests consistent with ADAAG 4.26.3?	☐	☐	☒	☐ Repair as needed ☐ Note:
76. Are the front edges of accessible benches between 17 and 19 inches maximum above the ground/floor?	☒	☐	☐	☐ Repair as needed ☐ Note:
77. Are floor spaces adjacent to benches consistent with ADAAG 4.2.4?	☐	☐	☒	☐ Repair as needed ☐ Note:
78. Is the ground/floor surface around the accessible benches firm and stable?	☐	☐	☒	☐ Repair as needed ☐ Note:
79. Do all accessible benches have back support the full length of the bench?	☐	☒	☐	☐ Repair as needed ☐ Note:
Playground Equipment Accessibility	**n/a**	**Yes**	**No**	**Playground Equipment Accessibility**
☒ Check here if section does not apply to this park and move to next section.				
80. Is there at least one of each play component on an accessible route[3]?	☐	☐	☐	☐ Expand existing accessible routes as needed ☐ Construct accessible routes ☐ Note: bark surface
81. Is there at least one of each ground-level play component on an accessible route?	☐	☐	☐	☐ Expand existing accessible routes as needed ☐ Construct accessible routes ☐ Note:
82. Are the play components integrated for use by all children; including those with disabilities?	☐	☐	☐	☐ Ensure play components on accessible routes can be used by all children ☐ Note:
Trails	**n/a**	**Yes**	**No**	**Trails**

[3] Different types of play components are based on the general experience provided by the play component. Different types include, but are no limited to, rocking, swinging, climbing, spinning and sliding. Components may be elevated or at or below ground level.

☐ Check here if section does not apply to this park and move to next section.				
83. Is the clear width of the trail 36 inches?	☐	☒	☐	☐ Renovate as required ☐ Construct all new trails to code ☐ Note:
84. Are openings in the trail less than ½ inch? *Note: (Board slat spaces, etc. – Elongated openings should be placed so that the long dimension is perpendicular or diagonal to the dominate direction of travel.)*	☐	☐	☒	☒ Renovate as required ☐ Construct all new trails to code ☒ Note: Cracks in asphalt trail filling with grass.
85. Is the trail free of constructed or natural barriers?	☐	☒	☐	☐ Remove as needed ☐ Note:
86. Are all overhead hazards maintained at a height that is sufficient for all expected users of the trail? (Remember, Objects that protrude into a pathway at a height greater than 27" are difficult for the blind or persons with visual disabilities who use canes to detect.)	☐	☒	☐	☐ Renovate as required ☐ Construct all new trails to code ☐ Note:
87. Is there a segment in the trail that has a 10% grade for more than 30 feet?	☐	☐	☒	☐ Construct level rest interval[4] ☐ Note:
88. Are all cross slopes a maximum of 3%?	☐	☒	☐	☐ Renovate as required ☐ Construct all new trails to code ☐ Note:
89. Are all tread obstacles a maximum of 1"?	☐	☒	☐	☐ Renovate as required ☐ Construct all new trails to code ☐ Note:
90. Are passing spaces (6" x 60") provided at maximum intervals of 200 ft. whenever the clear tread width is less then 60"?	☒	☐	☐	☐ Renovate as required ☐ Construct all new trails to code ☐ Note:
91. Does the trail have or require edge protection?	☐	☐	☒	☐ Renovate as required – Where provided, edge protection should be a minimum of 3". ☐ Construct all new trails to code ☐ Note:
92. Does the trail have signs that clearly indicate the type of use, rules and difficult conditions for the trail?	☐	☐	☒	☐ Renovate as required ☐ Construct all new trails to code ☐ Note:
93. Are there signs that warn users that changes in trail level or tread obstacles could not be removed?	☐	☐	☒	☐ Renovate as required ☐ Construct all new trails to code ☐ Note:
94. Are there detectable warnings anywhere a route crosses a traffic way?	☐	☐	☒	☐ Repair as needed ☒ Note: **Add at Springbrook Rd entry**
Shooting Facilities	**n/a**	**Yes**	**No**	**Shooting Facilities**
☒ Check here if section does not apply to this park and move to next section.				
95. Does the English Pit range have 60-inch diameter space with slopes not steeper than 1:48 so a wheelchair can turn around?	☐	☐	☐	☐ Renovate as needed ☐ Install accessible seating area ☐ Note
96. Do the firing benches have a wheelchair	☐	☐	☐	☐ Renovate as needed

[4] Resting intervals must be 60" minimum on length and at least as wide as the widest portion of the trail segment leading to the resting interval with a cross slope that does not exceed 3%.

accessible area with a bench between 27 and 34 inches with a minimum of 19" leg space?				☐ Install accessible seating area ☐ Note
97. If fixed firing positions are provided, at least 5% but not less than one of each type of firing position, must be served by an accessible route. Does English Pit have an accessible route?	☐	☐	☐	☐ Renovate as needed ☐ Install accessible route ☐ Note
98. Does the park have accessible routes to all target impact areas?	☐	☐	☐	☐ Expand existing accessible routes as needed ☐ Construct accessible routes ☐ Note:
Aquatic Recreation Facilities	**n/a**	**Yes**	**No**	**Aquatic Recreation Facilities**
☒ Check here if section does not apply to this park and move to next section.				
99. Is there an accessible route (36" wide) over beach areas that allow access to the water's edge?	☐	☐	☐	☐ Renovate as needed ☐ Install accessible route ☐ Note
100. Are there accessible routes with handrails that lead into designated swim areas such as ponds, lakes, etc.	☐	☐	☐	☐ Renovate as needed ☐ Install accessible route ☐ Note
Fishing piers and Platforms	**n/a**	**Yes**	**No**	**Fishing piers and Platforms**
☒ Check here if section does not apply to this park and move to next section.				
101. Does this park have a facility specifically designed and constructed for fishing?	☐	☐	☐	(Structures that were not built specifically for fishing do not need to meet ADAAG guidelines. Structures designed as fishing piers or platforms, must have an accessible route.)
102. Does the park have a gangway serving the fishing pier or platform?	☐	☐	☐	☐ Install a gangway platform – Gangway 1:12 maximum slope or at least 30 feet long. ☐ Renovate existing platform to meet code (Check specific building codes) ☐ Note
103. Does the gangway have a transition plate to the pier or platform that meets code?	☐	☐	☐	☐ Install a transition plate[5] ☐ Adjust existing transition plate to meet code ☐ Note
104. Does the gangway have handrails?	☐	☐	☐	☐ Install handrail to meet code ☐ Ensure existing rails meet code ☐ Note
105. Does the fishing pier or platform have railings, guards or handrails[6]?	☐	☐	☐	☐ Install as needed ☐ Renovate existing structure to meet code ☐ Note
106. Does the fishing pier or platform have edge protection[i]?	☐	☐	☐	☐ Install ☐ Renovate existing edge protection ☐ Note

[5] Gangways are not required to have to have landings at the end, if transition plates are provided. If the slope of the transition plate is greater that 1: 20 (5%), the transition plates must have a landing at the end of the transition plate not connected to the gangway and must comply with other ramp requirements.

[6] Where railings, guards or handrails are provided on a fishing pier or platform, at least 25 % of the rails must be 34 inches or less in height above the ground or dock so accommodate a person in a wheelchair. These railings must be dispersed as equally as possible to all areas of the fishing pier.

107. Does the fishing pier or platform have clear floor or ground space[ii]?	☐	☐	☐	☐ Install ☐ Renovate existing edge protection ☐ Note
108. Does the fishing pier or platform have sufficient turning space[iii]?	☐	☐	☐	☐ Install ☐ Renovate existing edge protection ☐ Note
Boating Facilities	**n/a**	**Yes**	**No**	**Boating Facilities**
☒ Check here if section does not apply to this park and move to next section.				
109. Is there an accessible route to the boating facilities?	☐	☐	☐	☐ Install ☐ Renovate existing route ☐ Note
110. Does the gangway to the dock or floating dock deigned to provide for a maximum 1:12 (8.33%) slope ? *Note: Not required to be longer than 80 feet. (Elevators may be used in lieu of gangways) In smaller facilities with less than 25 boat slips, the slope of the gangway may exceed 1:12, if the gangway is at least 30 feet long.*	☐	☐	☐	☐ Install ☐ Renovate existing route ☐ Note
111. Does the gangway have a transition plate to the pier or platform that meets code[iv]?	☐	☐	☐	☐ Install a transition plate ☐ Adjust existing transition plate to meet code ☐ Note

<table>
<tr><td>112. Where boat slips[7] are provided, does the number of accessible slips[8] comply with the table to the right?
Note: If boat slips at a facility are not identified or demarcated by length, each 40 feet of boat slip edge along the perimeter of a pier will be counted as one boat slip</td><td>☐</td><td>☐</td><td>☐</td><td>
<table>
<tr><th colspan="2">Number of Accessible Boat Slips Required</th></tr>
<tr><td>Total Slips in Facility</td><td>Minimum Accessible Slips</td></tr>
<tr><td>1-25</td><td>1</td></tr>
<tr><td>26-50</td><td>2</td></tr>
<tr><td>50-100</td><td>3</td></tr>
<tr><td>101-150</td><td>4</td></tr>
</table>
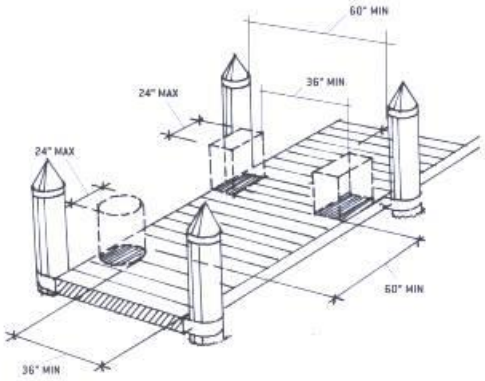

PIER CLEARANCE SPACE REDUCTION
</td></tr>
<tr><td>If the facility only has a boarding pier (see footnote # 9) at least 5% but not less than, must comply with these guidelines. The entire length of accessible boarding piers must comply with the same provisions that apply to slips.

113. Does this facility meet this regulation?</td><td>☐</td><td>☐</td><td>☐</td><td>☐ Install
☐ Renovate boarding pier
☐ Note</td></tr>
<tr><td>114. Is this facility compromised only of a boat launch with no boarding ramp or pier?</td><td>☐</td><td>☐</td><td>☐</td><td>If yes, there are no specific provisions that address access to launch ramps without boarding piers.</td></tr>
</table>

[7] A boat slip is the portion of a pier, main pier, finger pier, or float where a boat is berthed or moored, or used for embarking or disembarking. Boarding piers that are not part of a boat launch ramp are classified as “boat slips” for the purpose of this survey.

[8] Accessible boat slips must have clear pier space at least 60 inches wide and as long as the slip. Every 10 feet of linear pier edge serving the accessible slips must have at least one continuous clear opening that is at least 60 inches wide. The width of the clear pier space may be 36 inches wide for a length of 24 inches, as long as multiple 36-inch segments are separated by segments that are 60 inches minimum clear in width and 60 inches minimum clear in length, and the clear openings are at least 60 inches deep. Edge protection is not required

Item Number	Notes
	Asphalt pathway needsd repairs and edging to remove overgrown grass.

4.2.3* Wheelchair Turning Space. The space required for a wheelchair to make a 180-degree turn is a clear space of 60 in (1525 mm) diameter (see Fig. 3(a)) or a T-shaped space (see Fig. 3(b)). Appendix Note

4.2.4* Clear Floor or Ground Space for Wheelchairs.

4.2.4.1 Size and Approach. The minimum clear floor or ground space required to accommodate a single, stationary wheelchair and occupant is 30 in by 48 in (760 mm by 1220 mm) (see Fig. 4(a)). The minimum clear floor or ground space for wheelchairs may be positioned for forward or parallel approach to an object (see Fig. 4(b) and (c)). Clear floor or ground space for wheelchairs may be part of the knee space required under some objects.

4.2.4.2 Relationship of Maneuvering Clearance to Wheelchair Spaces. One full unobstructed side of the clear floor or ground space for a wheelchair shall adjoin or overlap an accessible route or adjoin another wheelchair clear floor space. If a clear floor space is located in an alcove or otherwise confined on all or part of three sides, additional maneuvering clearances shall be provided as shown in Fig. 4(d) and (e).

4.2.4.3 Surfaces for Wheelchair Spaces. Clear floor or ground spaces for wheelchairs shall comply with 4.5. Appendix Note

4.16.3* Height. The height of water closets shall be 17 in to 19 in (430 mm to 485 mm), measured to the top of the toilet seat (see Fig. 29(b)). Seats shall not be sprung to return to a lifted position. Appendix Note

4.16.4* Grab Bars. Grab bars for water closets not located in stalls shall comply with 4.26 and Fig. 29. The grab bar behind the water closet shall be 36 in (915 mm) minimum. Appendix Note

4.26.3 Structural Strength. The structural strength of grab bars, tub and shower seats, fasteners, and mounting devices shall meet the following specification:

(1) Bending stress in a grab bar or seat induced by the maximum bending moment from the application of 250 lbf (1112N) shall be less than the allowable stress for the material of the grab bar or seat.

(2) Shear stress induced in a grab bar or seat by the application of 250 lbf (1112N) shall be less than the allowable shear stress for the material of the grab bar or seat. If the connection between the grab bar or seat and its mounting bracket or other support is considered to be fully restrained, then direct and torsional shear stresses shall be totaled for the combined shear stress, which shall not exceed the allowable shear stress.

(3) Shear force induced in a fastener or mounting device from the application of 250 lbf (1112N) shall be less than the allowable lateral load of either the fastener or mounting device or the supporting structure, whichever is the smaller allowable load.

(4) Tensile force induced in a fastener by a direct tension force of 250 lbf (1112N) plus the maximum moment from the application of 250 lbf (1112N) shall be less than the allowable withdrawal load between the fastener and the supporting structure.

(5) Grab bars shall not rotate within their fittings.

4.27 Controls and Operating Mechanisms.

4.27.1 General. Controls and operating mechanisms required to be accessible by 4.1 shall comply with 4.27.

4.27.2 Clear Floor Space. Clear floor space complying with 4.2.4 that allows a forward or a parallel approach by a person using a wheelchair shall be provided at controls, dispensers, receptacles, and other operable equipment.

4.27.3* Height. The highest operable part of controls, dispensers, receptacles, and other operable equipment shall be placed within at least one of the reach ranges specified in 4.2.5 and 4.2.6. Electrical and communications system receptacles on walls shall be mounted no less than 15 in (380 mm) above the floor. Appendix Note

EXCEPTION: These requirements do not apply where the use of special equipment dictates otherwise or where electrical and communications systems receptacles are not normally intended for use by building occupants.

4.27.4 Operation. Controls and operating mechanisms shall be operable with one hand and shall not require tight grasping, pinching, or twisting of the wrist. The force required to activate controls shall be no greater than 5 lbf (22.2 N).

---

[i] Where railings, guards or handrails are provided, edge protection must be provided and extended a minimum of 2 inches above the ground or deck surface. Edge protection is not required where a railing, guardrail or handrail is provided, if the deck surface extends a minimum of 12 inches beyond the inside face of the railing.

[ii] At least one clear floor or ground space (30 inches by 48 inches) must be provided at each location that has a railing height of 34 inches maximum. If there is no railing, at least one clear space must be provided on a pier or platform.

[iii] Fishing piers and platforms must have at least one turning area, either 60-inch turning space or a T-shaped space to allow a person using a mobility device or wheelchair to make a 180-degree turn.

[iv] Gangways are not required to have to have landings at the end, if transition plates are provided. If the slope of the transition plate is greater that 1: 20 (5%), the transition plates must have a landing at the end of the transition plate not connected to the gangway and must comply with other ramp requirements.

ADA Compliance Program

MEDFORD PARKS AND RECREATION DEPARTMENT

ADA ACCESSIBILITY SURVEY FOR PARK FACILITIES

Date: 3/2/16 **Estimated Cost:**

Facility: Lewis Park **Department Notified:**

Survey by: Jean Akers **Date of Notification:**

Check all applicable building codes and ADAAG publications prior to any renovation or construction. This survey is only a guideline.

ITEM				RECOMMENDATIONS
Accessible Routes[1]	**n/a**	**Yes**	**No**	**Accessible Routes**
☐ Check here if section does not apply to this park and move to next section.				
1. Does the park have accessible routes to all accessible facilities within the park?	☐	☒	☐	☐ Expand existing accessible routes as needed ☐ Construct accessible routes ☐ Note:
2. Where court sports are provided (i.e. tennis, basketball, and volleyball) are there accessible routes to each court? (Routes must connect both sides of the court)	☐	☒	☐	☐ Expand existing accessible routes as needed ☐ Construct accessible routes ☐ Note:
3. Are there accessible routes to any and all animal containment areas?	☒	☐	☐	☐ Expand existing accessible routes as needed ☐ Construct accessible routes ☐ Note:
4. Are there detectable warnings anywhere a route crosses a traffic way?	☐	☒	☐	☐ Repair as needed ☐ Note:
ITEM				**RECOMMENDATIONS**
Parking and Drop-off Areas	**n/a**	**Yes**	**No**	**Parking and Drop-off Areas**
☐ Check here if section does not apply to this park and move to next section.				
5. Are an adequate number of accessible parking spaces available? The table below gives the ADAAG requirement for new construction and alterations (for lots with more than 100 spaces refer to ADAAG). Accessible Spaces per Overall spaces	☐	☒	☐	☐ Reconfigure a reasonable number of spaces by repainting stripes. ☐ Construct accessible routes ☐ Note:

Total Spaces	Accessible Spaces Required
1 to 25	1 space
26 to 50	2 spaces
51 to 75	3 spaces
76 to 100	4 spaces

[1] Accessible routes must comply with ADAAG provisions for the location, width (minimum 36 inches) passing space, head room, surface, slope (Maximum 1:12 (or 8.33%). Accessible routes must connect all accessible elements within the facility. Accessible routes must be stable, firm and slip resistant. There is no requirement to change the surface of a playing field to an accessible surface.

6. Are an adequate number of van accessible spaces provided? At least 1 of every 8 accessible spaces must be van-accessible (with a minimum of 1 van-accessible space in all cases.)	☐	☒	☐	☐ Reconfigure to provide van-accessible space(s).
7. Are the access aisles part of the accessible route?	☐	☒	☐	☐ Add curb ramps. ☐ Reconstruct sidewalk
8. Are the accessible spaces closest to the accessible entrance?	☐	☒	☐	☐ Reconfigure spaces.
9. Are accessible spaces marked with and International Symbol of Accessibility? Are there signs reading "Van Accessible" at van spaces?	☐	☒	☐	☐ Add signs, placed so that they are not obstructed by cars.
10. Is there an enforcement procedure to ensure that accessible parking is used only by those who need it?	☒	☐	☐	☐ Implement a policy to check periodically for violators and report them to the proper authorities.
Team Player Seating Areas	**n/a**	**Yes**	**No**	**Team Player Seating Areas**
☒ Check here if section does not apply to this park and move to next section.				
11. Do fixed team or player seating areas contain the required number of wheelchair spaces and companion seats required by ADAAG?	☐	☐	☐	☐ Renovate as needed ☐ Install accessible seating area ☐ Note
Restrooms	**n/a**	**Yes**	**No**	**Restrooms**
☐ Check here if section does not apply to this park and move to next section.				
12. If rest rooms are available to the public, is at least one rest room (either one for each sex, or unisex) fully accessible?	☐	☒	☐	☐ Reconfigure rest room. ☐ Combine rest rooms to create one unisex accessible rest room. ☐ Note:
13. Are there signs at inaccessible rest rooms that give directions to accessible ones?	☒	☐	☐	☐ Install accessible signs. ☐ Note:
14. Is there tactile signage identifying rest rooms? *Note: Mount signs on the wall, on the latch side of the door, complying with the permanent signage.*	☐	☒	☐	☐ Add accessible signage, placed to the side of the door, 60 inches to centerline (not on the door itself). ☐ If symbols are used, add supplementary verbal signage. ☐ Note:
15. Are pictograms or symbols used to identify rest rooms, and, if used, are raised characters and braille included below?	☐	☒	☐	☐ If symbols are used, add supplementary verbal signage with raised characters and braille below pictogram symbol. ☐ Note:
16. Is the doorway at least 32 inches clear?	☐	☒	☐	☐ Install offset (swing-clear) hinges. ☐ Widen the doorway. ☐ Note:
17. Are doors equipped with accessible handles (operable with a closed fist), 48 inches high or less?	☐	☒	☐	☐ Lower handles. ☐ Replace knobs or latches with lever or loop handles. ☐ Add lever extensions. ☐ Install power-assisted or automatic door openers. ☐ Note:

18. Can doors be opened easily (5 lbf maximum force)?	☐	☐	☐	☐ Adjust or replace closers. ☐ Install lighter doors. ☐ Install power-assisted or automatic door openers. ☐ Note: Locked for winter season
19. Does the entry configuration provide adequate maneuvering space for a person using a wheelchair? *Note: A person using a wheelchair needs 36 inches of clear width for forward movement, and a 5-foot diameter clear space or a T-shaped space to make turns. A minimum distance of 48 inches clear of the door swing is needed between the two doors of an entry vestibule.*	☐	☐	☐	☐ Rearrange furnishings such as chairs and trash cans. ☐ Remove inner door if there is a vestibule with two doors. ☐ Move or remove obstructing partitions. ☐ Note:
20. Is there a 36-inch-wide path to all fixtures?	☐	☐	☐	☐ Remove obstructions. ☐ Note:
21. Is the stall door operable with a closed fist, inside and out?	☐	☐	☐	☐ Replace inaccessible knobs with lever or loop handles. ☐ Add lever extensions. ☐ Note:
22. Is there a wheelchair-accessible stall that has an area of at least 5 feet by 5 feet, clear of the door swing, OR is there a stall that is less accessible but that provides greater access than a typical stall (either 36 by 69 inches or 48 by 69 inches)?	☐	☐	☐	☐ Move or remove partitions. ☐ Reverse the door swing if it is safe to do so. ☐ Note:
23. In the accessible stall, are there grab bars behind and on the side wall nearest to the toilet?	☐	☐	☐	☐ Add grab bars. ☐ Note:
24. Is the toilet seat 17 to 19 inches high?	☐	☐	☐	☐ Add raised seat. ☐ Note:
25. Does one lavatory have a 30-inch-wide by 48-inch-deep clear space in front? *Note: A maximum of 19 inches of the required depth may be under the lavatory.*	☐	☐	☐	☐ Rearrange furnishings. ☐ Replace lavatory. ☐ Remove or alter cabinetry to provide space underneath. Make sure hot pipes are covered. ☐ Move a partition or wall. ☐ Note:
26. Is the lavatory rim no higher than 34 inches?	☐	☐	☐	☐ Adjust or replace lavatory. ☐ Note:
27. Is there at least 29 inches from the floor to the bottom of the lavatory apron? (Excluding pipes)?	☐	☐	☐	☐ Adjust or replace lavatory. ☐ Note:
28. Can the faucet be operated with one closed fist?	☐	☐	☐	☐ Replace faucet handles with paddle type. ☐ Note:
29. Are soap and other dispensers and hand dryers within reach ranges (see page 7) and usable with one closed fist?	☐	☐	☐	☐ Lower dispensers. ☐ Replace with or provide additional accessible dispensers. ☐ Note:
30. Is the mirror mounted with the bottom edge of the reflecting surface 40 inches high or lower?	☐	☐	☐	☐ Lower or tilt down the mirror. ☐ Add a larger mirror anywhere in the room. ☐ Note:
Pit Toilets	**n/a**	**Yes**	**No**	**Pit Toilets**
31.				

☒ Check here if section does not apply to this park and move to next section.				
32. Is there a clear space of 60 inches by 60 inches adjacent to the toilet?	☐	☐	☐	☐ Repair as needed ☐ Note:
33. Does the height of the pit toilet riser comply with ADAAG 4.16.3?	☐	☐	☐	☐ Repair as needed ☐ Note:
34. Is the maneuvering space less than or equal to 1:50? (1:33 maximum allowed for drainage)	☐	☐	☐	☐ Repair as needed ☐ Note:
35. If the pit toilet has walls, are grab bars installed consistent with ADAAG 4.16.4?	☐	☐	☐	☐ Repair as needed ☐ Note:
36. Is the surface adjacent to the pit toilet firm and stable?	☐	☐	☐	☐ Repair as needed ☐ Note:
Utilities	**n/a**	**Yes**	**No**	**Utilities**
☒ Check here if section does not apply to this park and move to next section.				
37. Is the maneuvering space less than or equal to 1:50? (1:33 maximum allowed for drainage)	☐	☐	☐	☐ Repair as needed ☐ Note:
38. Is the surface adjacent to the utility firm and stable?	☐	☐	☐	☐ Repair as needed ☐ Note:
39. Are fixed water spouts located 28 inches minimum to 36 inches maximum above the ground or floor space?	☐	☐	☐	☐ Repair as needed ☐ Note:
40. Is the maneuvering space less than or equal to 1:50? (1:33 maximum allowed for drainage)	☐	☐	☐	☐ Repair as needed ☐ Note:
Drinking Fountains	**n/a**	**Yes**	**No**	**Drinking Fountains**
☐ Check here if section does not apply to this park and move to next section.				
41. Is there at least one fountain with clear floor space of at least 30 by 48 inches in front?	☐	☒	☐	☐ Clear more room by rearranging or removing furnishings. ☐ Note:
42. Is there one fountain with its spout no higher than 36 inches from the ground, and another with a standard height spout (or a single "hi-lo" fountain)?	☐	☒	☐	☐ Provide cup dispensers for fountains with spouts that are too high. ☐ Provide accessible water cooler. ☐ Note:
43. Are controls mounted on the front or on the side near the front edge, and operable with one closed fist?	☐	☒	☐	☐ Replace the controls. ☐ Note:
44. Is each water fountain cane-detectable (located within 27 inches off the floor or protruding less than 4 inches from the wall, into the circulation path?	☐	☒	☐	☐ Place a planter or other cane-detectable barrier on each side at floor level. ☐ Note:
Telephones	**n/a**	**Yes**	**No**	**Telephones**
☒ Check here if section does not apply to this park and move to next section.				
45. If pay or public use phones are provided, is there clear floor space of at least 30 by 48 inches in front of at least one?	☐	☐	☐	☐ Move furnishings. ☐ Replace booth with open station. ☐ Note:
46. Is the highest operable part of the phone no higher than 48 inches (up to 54 inches if a side approach is possible)?	☐	☐	☐	☐ Lower telephone. ☐ Note:
47. Does the phone protrude no more than 4 inches into the circulation space?	☐	☐	☐	☐ Place a cane-detectable barrier on each side at floor level. ☐ Note:

48. Does the phone have push-button controls?	☐	☐	☐	☐ Contact phone company to install push-buttons. ☐ Note:
49. Is the phone hearing-aid compatible?	☐	☐	☐	☐ Contact phone company to replace with hearing-aid compatible phone. ☐ Note:
50. Is the phone adapted with volume control?	☐	☐	☐	☐ Contact the phone company to add volume control. ☐ Note:
51. Is the phone with volume control identified with appropriate signage?	☐	☐	☐	☐ Add signage. ☐ Note:
52. If there are four or more public phones in the building, is one of the phones equipped with a text telephone (TT or TDD)?	☐	☐	☐	☐ Install a text telephone. ☐ Have a portable text telephone available. ☐ Provide a shelf and outlet next to phone. ☐ Note:
53. Is the location of the text telephone identified by accessible signage bearing the International TDD Symbol?	☐	☐	☐	☐ Add signage. ☐ Note:

Directional and Informational Signage	**n/a**	**Yes**	**No**	**Directional and Informational Signage**
☒ Check here if section does not apply to this park and move to next section.				
54. If mounted about 80 inches, do they have letters at least 3 inches high, with high contrast, and non-glare finish?	☐	☐	☐	☐ Review requirements and replace signs as needed, meeting the requirements for character size, contrast, and finish. ☐ Note:
55. Do directional and informational signs comply with legibility requirements? 56. (Building directories or temporary signs need not comply.)	☐	☐	☐	☐ Review requirements and replace signs as needed, meeting the requirements for character size, contrast, and finish. ☐ Note:

Seats, Tables and Counters	**n/a**	**Yes**	**No**	**Seats, Tables and Counters**
☐ Check here if section does not apply to this park and move to next section.				
50. Are the spaces for wheelchair seating distributed throughout? (Cover or uncovered gathering areas, bleachers)	☐	☐	☒	☐ Rearrange tables to allow room for wheelchairs in seating areas throughout the area. ☐ Remove some fixed seating. ☐ Note:
51. If picnic tables are provided, are at least 50% and no less than two of the tables, accessible?	☐	☐	☒	☐ Replace as needed ☐ Note:
52. Are knee spaces at accessible picnic tables at least 27 inches high, 30 inches wide, and 19 inches deep?	☐	☒	☐	☐ Replace or raise tables. ☐ Note: One table in shelter has W/C space
53. Are picnic tables spaced such that all areas of the table are accessible?	☐	☐	☒	☐ Rearrange tables to allow room for wheelchairs in seating areas throughout the area. ☐ Remove some fixed seating. ☐ Note:
54. At each type of cashier counter, is there a portion of the main counter that is no more than 36 inches high?	☒	☐	☐	☐ Provide a lower auxiliary counter or folding shelf. ☐ Arrange the counter and surrounding furnishings to create a space to hand items back and forth.

				☐ Note:
55. Is there a portion of food-ordering counters that is no more than 36 inches high, or is there space at the side for passing items to customers who have difficulty reaching over a high counter?	☒	☐	☐	☐ Lower section of counter. ☐ Arrange the counter and surrounding furnishings to create a space to pass items. ☐ Note:
Fire Rings	**n/a**	**Yes**	**No**	**Fire Rings**
☒ Check here if section does not apply to this park and move to next section.				
56. Do all fire rings have a clear space extending a minimum 48" deep by 48" wide at all usable portions of the ring?	☐	☐	☐	☐ Install clear spaces as needed ☐ Note:
57. Are the clear spaces around the fire pit on a firm and stable surface?	☐	☐	☐	☐ Correct as needed ☐ Note:
58. Is the fire surface height a minimum of 9" above the ground/floor?	☐	☐	☐	☐ Construct or renovate pits to meet clearances ☐ Note:
59. Are the slopes around fire pits not more than 1:50?	☐	☐	☐	☐ Construct or renovate pits to meet clearances ☐ Note:
Cooking Surfaces, Grills, Pedestal Grills[2]	**n/a**	**Yes**	**No**	**Cooking Surfaces, Grills, Pedestal Grills**
☐ Check here if section does not apply to this park and move to next section.				
60. Are accessible cooking features dispersed throughout the area and among the types provided?	☐	☐	☒	☐ Evenly disperse cooking features ☐ Note:
61. Are accessible cooking feature surfaces installed between 15 inches and 34 inches above the ground/floor?	☐	☒	☐	☐ Install as required ☐ Note:
62. Do operating controls and mechanisms comply with current ADAAG 4.27.1 (General) 4.27.2 (Clear Floor Space and 4.27.3 (Height)?	☒	☐	☐	☐ Install as required ☐ Note:
Fixed Trash/Recycling Containers	**n/a**	**Yes**	**No**	**Fixed Trash/Recycling Containers**
☒ Check here if section does not apply to this park and move to next section.				
63. Are trash and recycling containers accessible and do they comply with ADAAG 4.27?	☐	☐	☐	☐ Replace as needed ☐ Note:
Overlooks/Viewing Areas	**n/a**	**Yes**	**No**	**Overlooks/Viewing Areas**
☒ Check here if section does not apply to this park and move to next section.				
64. Are all viewing areas on an accessible route?	☐	☐	☐	☐ Install accessible paths as needed ☐ Note:
65. Are all viewing areas constructed to provide an unobstructed view?	☐	☐	☐	☐ Repair as needed ☐ Note:
66. Is there at least one maneuvering space that complies with ADAAG 4.2.3?	☐	☐	☐	☐ Repair as needed ☐ Note:
67. Is the ground surface firm and stable?	☐	☐	☐	☐ Repair as needed ☐ Note:
68. Is the maneuvering space less than or	☐	☐	☐	☐ Repair as needed

[2] Where there is only one cooking surface, grill or pedestal grill in a provided picnic area, it shall be accessible. Where multiple cooking features are provided in a picnic area, 50 percent, but no less than 2 shall be accessible.

equal to 1:50? (1:33 maximum allowed for drainage)				☐ Note:
Telescopes/Periscopes	**n/a**	**Yes**	**No**	**Telescopes/Periscopes**
☒ Check here if section does not apply to this park and move to next section.				
69. Are at least 20%, but not less than one, telescope or periscope that complies with ADAAG 4.27?	☐	☐	☐	☐ Repair as needed ☐ Note:
70. Are the eye pieces usable from a seated position?	☐	☐	☐	☐ Repair as needed ☐ Note:
71. Is the ground surface firm and stable?	☐	☐	☐	☐ Repair as needed ☐ Note:
72. Is the maneuvering space less than or equal to 1:50? (1:33 maximum allowed for drainage)	☐	☐	☐	☐ Repair as needed ☐ Note:
Benches	**n/a**	**Yes**	**No**	**Benches**
☐ Check here if section does not apply to this park and move to next section.				
73. Where multiple benches are provided, are at least 50% consistent with this section?	☐	☐	☒	☐ Repair as needed ☐ Note: **6 benches**
74. Are accessible benches dispersed evenly throughout the park?	☐	☒	☐	☐ Disperse benches evenly throughout the park ☐ Note:
75. Of the accessible benches that are provided, do at least 50% of those benches have armrests consistent with ADAAG 4.26.3?	☐	☐	☒	☐ Repair as needed ☐ Note:
76. Are the front edges of accessible benches between 17 and 19 inches maximum above the ground/floor?	☐	☒	☐	☐ Repair as needed ☐ Note:
77. Are floor spaces adjacent to benches consistent with ADAAG 4.2.4?	☐	☐	☒	☐ Repair as needed ☐ Note:
78. Is the ground/floor surface around the accessible benches firm and stable?	☐	☐	☒	☐ Repair as needed ☐ Note:
79. Do all accessible benches have back support the full length of the bench?	☐	☒	☐	☐ Repair as needed ☐ Note:
Playground Equipment Accessibility	**n/a**	**Yes**	**No**	**Playground Equipment Accessibility**
☐ Check here if section does not apply to this park and move to next section.				
80. Is there at least one of each play component on an accessible route[3]?	☐	☒	☐	☐ Expand existing accessible routes as needed ☐ Construct accessible routes ☐ Note: bark surface
81. Is there at least one of each ground-level play component on an accessible route?	☐	☒	☐	☐ Expand existing accessible routes as needed ☐ Construct accessible routes ☐ Note:
82. Are the play components integrated for use by all children; including those with disabilities?	☐	☒	☐	☐ Ensure play components on accessible routes can be used by all children ☐ Note:
Trails	**n/a**	**Yes**	**No**	**Trails**

[3] Different types of play components are based on the general experience provided by the play component. Different types include, but are no limited to, rocking, swinging, climbing, spinning and sliding. Components may be elevated or at or below ground level.

☐ Check here if section does not apply to this park and move to next section.				
83. Is the clear width of the trail 36 inches?	☐	☒	☐	☐ Renovate as required ☐ Construct all new trails to code ☐ Note:
84. Are openings in the trail less than ½ inch? *Note: (Board slat spaces, etc. – Elongated openings should be placed so that the long dimension is perpendicular or diagonal to the dominate direction of travel.)*	☐	☐	☒	☐ Renovate as required ☐ Construct all new trails to code ☐ Note: **Cracks and gaps in asphalt pavement**
85. Is the trail free of constructed or natural barriers?	☐	☒	☐	☐ Remove as needed ☐ Note:
86. Are all overhead hazards maintained at a height that is sufficient for all expected users of the trail? (Remember, Objects that protrude into a pathway at a height greater than 27" are difficult for the blind or persons with visual disabilities who use canes to detect.)	☐	☒	☐	☐ Renovate as required ☐ Construct all new trails to code ☐ Note:
87. Is there a segment in the trail that has a 10% grade for more than 30 feet?	☐	☐	☒	☐ Construct level rest interval[4] ☐ Note:
88. Are all cross slopes a maximum of 3%?	☐	☒	☐	☐ Renovate as required ☐ Construct all new trails to code ☐ Note:
89. Are all tread obstacles a maximum of 1"?	☐	☐	☒	☐ Renovate as required ☐ Construct all new trails to code ☐ Note: **Gaps in asphalt**
90. Are passing spaces (6" x 60") provided at maximum intervals of 200 ft. whenever the clear tread width is less then 60"?	☒	☐	☐	☐ Renovate as required ☐ Construct all new trails to code ☐ Note:
91. Does the trail have or require edge protection?	☐	☐	☒	☐ Renovate as required – Where provided, edge protection should be a minimum of 3". ☐ Construct all new trails to code ☐ Note:
92. Does the trail have signs that clearly indicate the type of use, rules and difficult conditions for the trail?	☐	☐	☒	☐ Renovate as required ☐ Construct all new trails to code ☐ Note:
93. Are there signs that warn users that changes in trail level or tread obstacles could not be removed?	☐	☐	☒	☐ Renovate as required ☐ Construct all new trails to code ☐ Note:
94. Are there detectable warnings anywhere a route crosses a traffic way?	☐	☐	☒	☐ Repair as needed ☐ Note: **Missing at H/C parking space**
Shooting Facilities	**n/a**	**Yes**	**No**	**Shooting Facilities**
☒ Check here if section does not apply to this park and move to next section.				
95. Does the English Pit range have 60-inch diameter space with slopes not steeper than 1:48 so a wheelchair can turn around?	☐	☐	☐	☐ Renovate as needed ☐ Install accessible seating area ☐ Note
96. Do the firing benches have a wheelchair	☐	☐	☐	☐ Renovate as needed

[4] Resting intervals must be 60" minimum on length and at least as wide as the widest portion of the trail segment leading to the resting interval with a cross slope that does not exceed 3%.

accessible area with a bench between 27 and 34 inches with a minimum of 19" leg space?				☐ Install accessible seating area ☐ Note
97. If fixed firing positions are provided, at least 5% but not less than one of each type of firing position, must be served by an accessible route. Does English Pit have an accessible route?	☐	☐	☐	☐ Renovate as needed ☐ Install accessible route ☐ Note
98. Does the park have accessible routes to all target impact areas?	☐	☐	☐	☐ Expand existing accessible routes as needed ☐ Construct accessible routes ☐ Note:
Aquatic Recreation Facilities	**n/a**	**Yes**	**No**	**Aquatic Recreation Facilities**
☒ Check here if section does not apply to this park and move to next section.				
99. Is there an accessible route (36" wide) over beach areas that allow access to the water's edge?	☐	☐	☐	☐ Renovate as needed ☐ Install accessible route ☐ Note
100. Are there accessible routes with handrails that lead into designated swim areas such as ponds, lakes, etc.	☐	☐	☐	☐ Renovate as needed ☐ Install accessible route ☐ Note
Fishing piers and Platforms	**n/a**	**Yes**	**No**	**Fishing piers and Platforms**
☒ Check here if section does not apply to this park and move to next section.				
101. Does this park have a facility specifically designed and constructed for fishing?	☐	☐	☐	(Structures that were not built specifically for fishing do not need to meet ADAAG guidelines. Structures designed as fishing piers or platforms, must have an accessible route.)
102. Does the park have a gangway serving the fishing pier or platform?	☐	☐	☐	☐ Install a gangway platform – Gangway 1:12 maximum slope or at least 30 feet long. ☐ Renovate existing platform to meet code (Check specific building codes) ☐ Note
103. Does the gangway have a transition plate to the pier or platform that meets code?	☐	☐	☐	☐ Install a transition plate[5] ☐ Adjust existing transition plate to meet code ☐ Note
104. Does the gangway have handrails?	☐	☐	☐	☐ Install handrail to meet code ☐ Ensure existing rails meet code ☐ Note
105. Does the fishing pier or platform have railings, guards or handrails[6]?	☐	☐	☐	☐ Install as needed ☐ Renovate existing structure to meet code ☐ Note
106. Does the fishing pier or platform have edge protection[i]?	☐	☐	☐	☐ Install ☐ Renovate existing edge protection ☐ Note

[5] Gangways are not required to have to have landings at the end, if transition plates are provided. If the slope of the transition plate is greater that 1: 20 (5%), the transition plates must have a landing at the end of the transition plate not connected to the gangway and must comply with other ramp requirements.

[6] Where railings, guards or handrails are provided on a fishing pier or platform, at least 25 % of the rails must be 34 inches or less in height above the ground or dock so accommodate a person in a wheelchair. These railings must be dispersed as equally as possible to all areas of the fishing pier.

107. Does the fishing pier or platform have clear floor or ground space[ii]?	☐	☐	☐	☐ Install ☐ Renovate existing edge protection ☐ Note
108. Does the fishing pier or platform have sufficient turning space[iii]?	☐	☐	☐	☐ Install ☐ Renovate existing edge protection ☐ Note
Boating Facilities	**n/a**	**Yes**	**No**	**Boating Facilities**
☒ Check here if section does not apply to this park and move to next section.				
109. Is there an accessible route to the boating facilities?	☐	☐	☐	☐ Install ☐ Renovate existing route ☐ Note
110. Does the gangway to the dock or floating dock deigned to provide for a maximum 1:12 (8.33%) slope ? *Note: Not required to be longer than 80 feet. (Elevators may be used in lieu of gangways) In smaller facilities with less than 25 boat slips, the slope of the gangway may exceed 1:12, if the gangway is at least 30 feet long.*	☐	☐	☐	☐ Install ☐ Renovate existing route ☐ Note
111. Does the gangway have a transition plate to the pier or platform that meets code[iv]?	☐	☐	☐	☐ Install a transition plate ☐ Adjust existing transition plate to meet code ☐ Note

<table>
<tr><td>112. Where boat slips[7] are provided, does the number of accessible slips[8] comply with the table to the right?
Note: If boat slips at a facility are not identified or demarcated by length, each 40 feet of boat slip edge along the perimeter of a pier will be counted as one boat slip</td><td>☐</td><td>☐</td><td>☐</td><td>
<table>
<tr><th colspan="2">Number of Accessible Boat Slips Required</th></tr>
<tr><td>Total Slips in Facility</td><td>Minimum Accessible Slips</td></tr>
<tr><td>1-25</td><td>1</td></tr>
<tr><td>26-50</td><td>2</td></tr>
<tr><td>50-100</td><td>3</td></tr>
<tr><td>101-150</td><td>4</td></tr>
</table>
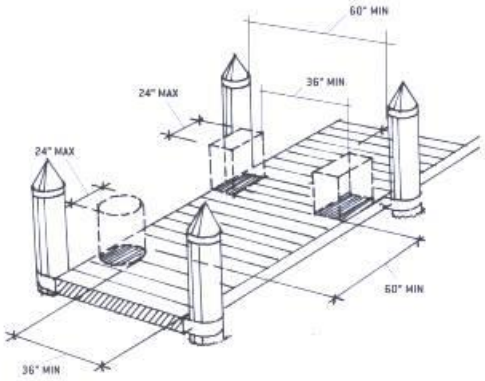

PIER CLEARANCE SPACE REDUCTION
</td></tr>
<tr><td>If the facility only has a boarding pier (see footnote # 9) at least 5% but not less than, must comply with these guidelines. The entire length of accessible boarding piers must comply with the same provisions that apply to slips.

113. Does this facility meet this regulation?</td><td>☐</td><td>☐</td><td>☐</td><td>☐ Install
☐ Renovate boarding pier
☐ Note</td></tr>
<tr><td>114. Is this facility compromised only of a boat launch with no boarding ramp or pier?</td><td>☐</td><td>☐</td><td>☐</td><td>If yes, there are no specific provisions that address access to launch ramps without boarding piers.</td></tr>
</table>

[7] A boat slip is the portion of a pier, main pier, finger pier, or float where a boat is berthed or moored, or used for embarking or disembarking. Boarding piers that are not part of a boat launch ramp are classified as “boat slips” for the purpose of this survey.

[8] Accessible boat slips must have clear pier space at least 60 inches wide and as long as the slip. Every 10 feet of linear pier edge serving the accessible slips must have at least one continuous clear opening that is at least 60 inches wide. The width of the clear pier space may be 36 inches wide for a length of 24 inches, as long as multiple 36-inch segments are separated by segments that are 60 inches minimum clear in width and 60 inches minimum clear in length, and the clear openings are at least 60 inches deep. Edge protection is not required

Item Number	Notes

4.2.3* Wheelchair Turning Space. The space required for a wheelchair to make a 180-degree turn is a clear space of 60 in (1525 mm) diameter (see Fig. 3(a)) or a T-shaped space (see Fig. 3(b)). Appendix Note

4.2.4* Clear Floor or Ground Space for Wheelchairs.

4.2.4.1 Size and Approach. The minimum clear floor or ground space required to accommodate a single, stationary wheelchair and occupant is 30 in by 48 in (760 mm by 1220 mm) (see Fig. 4(a)). The minimum clear floor or ground space for wheelchairs may be positioned for forward or parallel approach to an object (see Fig. 4(b) and (c)). Clear floor or ground space for wheelchairs may be part of the knee space required under some objects.

4.2.4.2 Relationship of Maneuvering Clearance to Wheelchair Spaces. One full unobstructed side of the clear floor or ground space for a wheelchair shall adjoin or overlap an accessible route or adjoin another wheelchair clear floor space. If a clear floor space is located in an alcove or otherwise confined on all or part of three sides, additional maneuvering clearances shall be provided as shown in Fig. 4(d) and (e).

4.2.4.3 Surfaces for Wheelchair Spaces. Clear floor or ground spaces for wheelchairs shall comply with 4.5. Appendix Note

4.16.3* Height. The height of water closets shall be 17 in to 19 in (430 mm to 485 mm), measured to the top of the toilet seat (see Fig. 29(b)). Seats shall not be sprung to return to a lifted position. Appendix Note

4.16.4* Grab Bars. Grab bars for water closets not located in stalls shall comply with 4.26 and Fig. 29. The grab bar behind the water closet shall be 36 in (915 mm) minimum. Appendix Note

4.26.3 Structural Strength. The structural strength of grab bars, tub and shower seats, fasteners, and mounting devices shall meet the following specification:

(1) Bending stress in a grab bar or seat induced by the maximum bending moment from the application of 250 lbf (1112N) shall be less than the allowable stress for the material of the grab bar or seat.

(2) Shear stress induced in a grab bar or seat by the application of 250 lbf (1112N) shall be less than the allowable shear stress for the material of the grab bar or seat. If the connection between the grab bar or seat and its mounting bracket or other support is considered to be fully restrained, then direct and torsional shear stresses shall be totaled for the combined shear stress, which shall not exceed the allowable shear stress.

(3) Shear force induced in a fastener or mounting device from the application of 250 lbf (1112N) shall be less than the allowable lateral load of either the fastener or mounting device or the supporting structure, whichever is the smaller allowable load.

(4) Tensile force induced in a fastener by a direct tension force of 250 lbf (1112N) plus the maximum moment from the application of 250 lbf (1112N) shall be less than the allowable withdrawal load between the fastener and the supporting structure.

(5) Grab bars shall not rotate within their fittings.

4.27 Controls and Operating Mechanisms.

4.27.1 General. Controls and operating mechanisms required to be accessible by 4.1 shall comply with 4.27.

4.27.2 Clear Floor Space. Clear floor space complying with 4.2.4 that allows a forward or a parallel approach by a person using a wheelchair shall be provided at controls, dispensers, receptacles, and other operable equipment.

4.27.3* Height. The highest operable part of controls, dispensers, receptacles, and other operable equipment shall be placed within at least one of the reach ranges specified in 4.2.5 and 4.2.6. Electrical and communications system receptacles on walls shall be mounted no less than 15 in (380 mm) above the floor. Appendix Note

EXCEPTION: These requirements do not apply where the use of special equipment dictates otherwise or where electrical and communications systems receptacles are not normally intended for use by building occupants.

4.27.4 Operation. Controls and operating mechanisms shall be operable with one hand and shall not require tight grasping, pinching, or twisting of the wrist. The force required to activate controls shall be no greater than 5 lbf (22.2 N).

---

[i] Where railings, guards or handrails are provided, edge protection must be provided and extended a minimum of 2 inches above the ground or deck surface. Edge protection is not required where a railing, guardrail or handrail is provided, if the deck surface extends a minimum of 12 inches beyond the inside face of the railing.

[ii] At least one clear floor or ground space (30 inches by 48 inches) must be provided at each location that has a railing height of 34 inches maximum. If there is no railing, at least one clear space must be provided on a pier or platform.

[iii] Fishing piers and platforms must have at least one turning area, either 60-inch turning space or a T-shaped space to allow a person using a mobility device or wheelchair to make a 180-degree turn.

[iv] Gangways are not required to have to have landings at the end, if transition plates are provided. If the slope of the transition plate is greater that 1: 20 (5%), the transition plates must have a landing at the end of the transition plate not connected to the gangway and must comply with other ramp requirements.

ADA Compliance Program

MEDFORD PARKS AND RECREATION DEPARTMENT

ADA ACCESSIBILITY SURVEY FOR PARK FACILITIES

Date: March 2, 2016 **Estimated Cost:**

Facility: Liberty Park **Department Notified:**

Survey by: Jean Akers **Date of Notification:**

Check all applicable building codes and ADAAG publications prior to any renovation or construction. This survey is only a guideline.

ITEM				RECOMMENDATIONS
Accessible Routes[1]	**n/a**	**Yes**	**No**	**Accessible Routes**
☐ Check here if section does not apply to this park and move to next section.				
1. Does the park have accessible routes to all accessible facilities within the park?	☐	☒	☐	☐ Expand existing accessible routes as needed ☐ Construct accessible routes ☐ Note:
2. Where court sports are provided (i.e. tennis, basketball, and volleyball) are there accessible routes to each court? (Routes must connect both sides of the court)	☒	☐	☐	☐ Expand existing accessible routes as needed ☐ Construct accessible routes ☐ Note:
3. Are there accessible routes to any and all animal containment areas?	☒	☐	☐	☐ Expand existing accessible routes as needed ☐ Construct accessible routes ☐ Note:
4. Are there detectable warnings anywhere a route crosses a traffic way?	☐	☐	☒	☐ Repair as needed ☐ Note: **Missing at Bartlett entry**
ITEM				**RECOMMENDATIONS**
Parking and Drop-off Areas	**n/a**	**Yes**	**No**	**Parking and Drop-off Areas**
☒ Check here if section does not apply to this park and move to next section.				
5. Are an adequate number of accessible parking spaces available? The table below gives the ADAAG requirement for new construction and alterations (for lots with more than 100 spaces refer to ADAAG). Accessible Spaces per Overall spaces Total Spaces — Accessible Spaces Required 1 to 25 — 1 space 26 to 50 — 2 spaces 51 to 75 — 3 spaces 76 to 100 — 4 spaces	☒	☐	☐	☐ Reconfigure a reasonable number of spaces by repainting stripes. ☐ Construct accessible routes ☒ Note: **On-street parking**

[1] Accessible routes must comply with ADAAG provisions for the location, width (minimum 36 inches) passing space, head room, surface, slope (Maximum 1:12 (or 8.33%). Accessible routes must connect all accessible elements within the facility. Accessible routes must be stable, firm and slip resistant. There is no requirement to change the surface of a playing field to an accessible surface.

6. Are an adequate number of van accessible spaces provided? At least 1 of every 8 accessible spaces must be van-accessible (with a minimum of 1 van-accessible space in all cases.)	☐	☐	☐	☐ Reconfigure to provide van-accessible space(s).
7. Are the access aisles part of the accessible route?	☐	☐	☐	☐ Add curb ramps. ☐ Reconstruct sidewalk
8. Are the accessible spaces closest to the accessible entrance?	☐	☐	☐	☐ Reconfigure spaces.
9. Are accessible spaces marked with and International Symbol of Accessibility? Are there signs reading "Van Accessible" at van spaces?	☐	☐	☐	☐ Add signs, placed so that they are not obstructed by cars.
10. Is there an enforcement procedure to ensure that accessible parking is used only by those who need it?	☐	☐	☐	☐ Implement a policy to check periodically for violators and report them to the proper authorities.
Team Player Seating Areas	**n/a**	**Yes**	**No**	**Team Player Seating Areas**
☒ Check here if section does not apply to this park and move to next section.				
11. Do fixed team or player seating areas contain the required number of wheelchair spaces and companion seats required by ADAAG?	☐	☐	☐	☐ Renovate as needed ☐ Install accessible seating area ☐ Note
Restrooms	**n/a**	**Yes**	**No**	**Restrooms**
☐ Check here if section does not apply to this park and move to next section.				
12. If rest rooms are available to the public, is at least one rest room (either one for each sex, or unisex) fully accessible?	☐	☒	☐	☐ Reconfigure rest room. ☐ Combine rest rooms to create one unisex accessible rest room. ☐ Note:
13. Are there signs at inaccessible rest rooms that give directions to accessible ones?	☒	☐	☐	☐ Install accessible signs. ☐ Note:
14. Is there tactile signage identifying rest rooms? *Note: Mount signs on the wall, on the latch side of the door, complying with the permanent signage.*	☐	☒	☐	☐ Add accessible signage, placed to the side of the door, 60 inches to centerline (not on the door itself). ☐ If symbols are used, add supplementary verbal signage. ☐ Note:
15. Are pictograms or symbols used to identify rest rooms, and, if used, are raised characters and braille included below?	☐	☒	☐	☐ If symbols are used, add supplementary verbal signage with raised characters and braille below pictogram symbol. ☐ Note:
16. Is the doorway at least 32 inches clear?	☐	☒	☐	☐ Install offset (swing-clear) hinges. ☐ Widen the doorway. ☐ Note:
17. Are doors equipped with accessible handles (operable with a closed fist), 48 inches high or less?	☐	☒	☐	☐ Lower handles. ☐ Replace knobs or latches with lever or loop handles. ☐ Add lever extensions. ☐ Install power-assisted or automatic door openers. ☐ Note:

18. Can doors be opened easily (5 lbf maximum force)?	☐	☒	☐	☐ Adjust or replace closers. ☐ Install lighter doors. ☐ Install power-assisted or automatic door openers. ☐ Note:
19. Does the entry configuration provide adequate maneuvering space for a person using a wheelchair? *Note: A person using a wheelchair needs 36 inches of clear width for forward movement, and a 5-foot diameter clear space or a T-shaped space to make turns. A minimum distance of 48 inches clear of the door swing is needed between the two doors of an entry vestibule.*	☐	☒	☐	☐ Rearrange furnishings such as chairs and trash cans. ☐ Remove inner door if there is a vestibule with two doors. ☐ Move or remove obstructing partitions. ☐ Note:
20. Is there a 36-inch-wide path to all fixtures?	☐	☐	☐	☐ Remove obstructions. ☐ Note:
21. Is the stall door operable with a closed fist, inside and out?	☐	☐	☐	☐ Replace inaccessible knobs with lever or loop handles. ☐ Add lever extensions. ☐ Note:
22. Is there a wheelchair-accessible stall that has an area of at least 5 feet by 5 feet, clear of the door swing, OR is there a stall that is less accessible but that provides greater access than a typical stall (either 36 by 69 inches or 48 by 69 inches)?	☐	☐	☐	☐ Move or remove partitions. ☐ Reverse the door swing if it is safe to do so. ☐ Note:
23. In the accessible stall, are there grab bars behind and on the side wall nearest to the toilet?	☐	☐	☐	☐ Add grab bars. ☐ Note:
24. Is the toilet seat 17 to 19 inches high?	☐	☐	☐	☐ Add raised seat. ☐ Note:
25. Does one lavatory have a 30-inch-wide by 48-inch-deep clear space in front? *Note: A maximum of 19 inches of the required depth may be under the lavatory.*	☐	☐	☐	☐ Rearrange furnishings. ☐ Replace lavatory. ☐ Remove or alter cabinetry to provide space underneath. Make sure hot pipes are covered. ☐ Move a partition or wall. ☐ Note:
26. Is the lavatory rim no higher than 34 inches?	☐	☐	☐	☐ Adjust or replace lavatory. ☐ Note:
27. Is there at least 29 inches from the floor to the bottom of the lavatory apron? (Excluding pipes)?	☐	☐	☐	☐ Adjust or replace lavatory. ☐ Note:
28. Can the faucet be operated with one closed fist?	☐	☐	☐	☐ Replace faucet handles with paddle type. ☐ Note:
29. Are soap and other dispensers and hand dryers within reach ranges (see page 7) and usable with one closed fist?	☐	☐	☐	☐ Lower dispensers. ☐ Replace with or provide additional accessible dispensers. ☐ Note:
30. Is the mirror mounted with the bottom edge of the reflecting surface 40 inches high or lower?	☐	☐	☐	☐ Lower or tilt down the mirror. ☐ Add a larger mirror anywhere in the room. ☐ Note:
Pit Toilets	**n/a**	**Yes**	**No**	**Pit Toilets**
31.				

☒ Check here if section does not apply to this park and move to next section.				
32. Is there a clear space of 60 inches by 60 inches adjacent to the toilet?	☐	☐	☐	☐ Repair as needed ☐ Note:
33. Does the height of the pit toilet riser comply with ADAAG 4.16.3?	☐	☐	☐	☐ Repair as needed ☐ Note:
34. Is the maneuvering space less than or equal to 1:50? (1:33 maximum allowed for drainage)	☐	☐	☐	☐ Repair as needed ☐ Note:
35. If the pit toilet has walls, are grab bars installed consistent with ADAAG 4.16.4?	☐	☐	☐	☐ Repair as needed ☐ Note:
36. Is the surface adjacent to the pit toilet firm and stable?	☐	☐	☐	☐ Repair as needed ☐ Note:
Utilities	**n/a**	**Yes**	**No**	**Utilities**
☒ Check here if section does not apply to this park and move to next section.				
37. Is the maneuvering space less than or equal to 1:50? (1:33 maximum allowed for drainage)	☐	☐	☐	☐ Repair as needed ☐ Note:
38. Is the surface adjacent to the utility firm and stable?	☐	☐	☐	☐ Repair as needed ☐ Note:
39. Are fixed water spouts located 28 inches minimum to 36 inches maximum above the ground or floor space?	☐	☐	☐	☐ Repair as needed ☐ Note:
40. Is the maneuvering space less than or equal to 1:50? (1:33 maximum allowed for drainage)	☐	☐	☐	☐ Repair as needed ☐ Note:
Drinking Fountains	**n/a**	**Yes**	**No**	**Drinking Fountains**
☐ Check here if section does not apply to this park and move to next section.				
41. Is there at least one fountain with clear floor space of at least 30 by 48 inches in front?	☐	☒	☐	☐ Clear more room by rearranging or removing furnishings. ☐ Note:
42. Is there one fountain with its spout no higher than 36 inches from the ground, and another with a standard height spout (or a single "hi-lo" fountain)?	☐	☒	☐	☐ Provide cup dispensers for fountains with spouts that are too high. ☐ Provide accessible water cooler. ☐ Note:
43. Are controls mounted on the front or on the side near the front edge, and operable with one closed fist?	☐	☒	☐	☐ Replace the controls. ☐ Note:
44. Is each water fountain cane-detectable (located within 27 inches off the floor or protruding less than 4 inches from the wall, into the circulation path?	☐	☒	☐	☐ Place a planter or other cane-detectable barrier on each side at floor level. ☐ Note:
Telephones	**n/a**	**Yes**	**No**	**Telephones**
☒ Check here if section does not apply to this park and move to next section.				
45. If pay or public use phones are provided, is there clear floor space of at least 30 by 48 inches in front of at least one?	☐	☐	☐	☐ Move furnishings. ☐ Replace booth with open station. ☐ Note:
46. Is the highest operable part of the phone no higher than 48 inches (up to 54 inches if a side approach is possible)?	☐	☐	☐	☐ Lower telephone. ☐ Note:
47. Does the phone protrude no more than 4 inches into the circulation space?	☐	☐	☐	☐ Place a cane-detectable barrier on each side at floor level. ☐ Note:

48. Does the phone have push-button controls?	☐	☐	☐	☐ Contact phone company to install push-buttons. ☐ Note:
49. Is the phone hearing-aid compatible?	☐	☐	☐	☐ Contact phone company to replace with hearing-aid compatible phone. ☐ Note:
50. Is the phone adapted with volume control?	☐	☐	☐	☐ Contact the phone company to add volume control. ☐ Note:
51. Is the phone with volume control identified with appropriate signage?	☐	☐	☐	☐ Add signage. ☐ Note:
52. If there are four or more public phones in the building, is one of the phones equipped with a text telephone (TT or TDD)?	☐	☐	☐	☐ Install a text telephone. ☐ Have a portable text telephone available. ☐ Provide a shelf and outlet next to phone. ☐ Note:
53. Is the location of the text telephone identified by accessible signage bearing the International TDD Symbol?	☐	☐	☐	☐ Add signage. ☐ Note:

Directional and Informational Signage	**n/a**	**Yes**	**No**	**Directional and Informational Signage**
☒ Check here if section does not apply to this park and move to next section.				
54. If mounted about 80 inches, do they have letters at least 3 inches high, with high contrast, and non-glare finish?	☐	☐	☐	☐ Review requirements and replace signs as needed, meeting the requirements for character size, contrast, and finish. ☐ Note:
55. Do directional and informational signs comply with legibility requirements? 56. (Building directories or temporary signs need not comply.)	☐	☐	☐	☐ Review requirements and replace signs as needed, meeting the requirements for character size, contrast, and finish. ☐ Note:

Seats, Tables and Counters	**n/a**	**Yes**	**No**	**Seats, Tables and Counters**
☐ Check here if section does not apply to this park and move to next section.				
50. Are the spaces for wheelchair seating distributed throughout? (Cover or uncovered gathering areas, bleachers)	☐	☐	☒	☐ Rearrange tables to allow room for wheelchairs in seating areas throughout the area. ☐ Remove some fixed seating. ☐ Note:
51. If picnic tables are provided, are at least 50% and no less than two of the tables, accessible?	☐	☐	☒	☒ Replace as needed ☐ Note: **swap out 2 existing tables**
52. Are knee spaces at accessible picnic tables at least 27 inches high, 30 inches wide, and 19 inches deep?	☐	☐	☒	☒ Replace or raise tables. ☐ Note:
53. Are picnic tables spaced such that all areas of the table are accessible?	☐	☐	☒	☒ Rearrange tables to allow room for wheelchairs in seating areas throughout the area. ☐ Remove some fixed seating. ☐ Note:
54. At each type of cashier counter, is there a portion of the main counter that is no more than 36 inches high?	☒	☐	☐	☐ Provide a lower auxiliary counter or folding shelf. ☐ Arrange the counter and surrounding furnishings to create a space to hand items back and forth.

				☐ Note:
55. Is there a portion of food-ordering counters that is no more than 36 inches high, or is there space at the side for passing items to customers who have difficulty reaching over a high counter?	☒	☐	☐	☐ Lower section of counter. ☐ Arrange the counter and surrounding furnishings to create a space to pass items. ☐ Note:
Fire Rings	**n/a**	**Yes**	**No**	**Fire Rings**
☒ Check here if section does not apply to this park and move to next section.				
56. Do all fire rings have a clear space extending a minimum 48" deep by 48" wide at all usable portions of the ring?	☐	☐	☐	☐ Install clear spaces as needed ☐ Note:
57. Are the clear spaces around the fire pit on a firm and stable surface?	☐	☐	☐	☐ Correct as needed ☐ Note:
58. Is the fire surface height a minimum of 9" above the ground/floor?	☐	☐	☐	☐ Construct or renovate pits to meet clearances ☐ Note:
59. Are the slopes around fire pits not more than 1:50?	☐	☐	☐	☐ Construct or renovate pits to meet clearances ☐ Note:
Cooking Surfaces, Grills, Pedestal Grills[2]	**n/a**	**Yes**	**No**	**Cooking Surfaces, Grills, Pedestal Grills**
☒ Check here if section does not apply to this park and move to next section.				
60. Are accessible cooking features dispersed throughout the area and among the types provided?	☐	☐	☐	☐ Evenly disperse cooking features ☐ Note:
61. Are accessible cooking feature surfaces installed between 15 inches and 34 inches above the ground/floor?	☐	☐	☐	☐ Install as required ☐ Note:
62. Do operating controls and mechanisms comply with current ADAAG 4.27.1 (General) 4.27.2 (Clear Floor Space and 4.27.3 (Height)?	☐	☐	☐	☐ Install as required ☐ Note:
Fixed Trash/Recycling Containers	**n/a**	**Yes**	**No**	**Fixed Trash/Recycling Containers**
☐ Check here if section does not apply to this park and move to next section.				
63. Are trash and recycling containers accessible and do they comply with ADAAG 4.27?	☐	☒	☐	☐ Replace as needed ☐ Note:
Overlooks/Viewing Areas	**n/a**	**Yes**	**No**	**Overlooks/Viewing Areas**
☒ Check here if section does not apply to this park and move to next section.				
64. Are all viewing areas on an accessible route?	☐	☐	☐	☐ Install accessible paths as needed ☐ Note:
65. Are all viewing areas constructed to provide an unobstructed view?	☐	☐	☐	☐ Repair as needed ☐ Note:
66. Is there at least one maneuvering space that complies with ADAAG 4.2.3?	☐	☐	☐	☐ Repair as needed ☐ Note:
67. Is the ground surface firm and stable?	☐	☐	☐	☐ Repair as needed ☐ Note:
68. Is the maneuvering space less than or	☐	☐	☐	☐ Repair as needed

[2] Where there is only one cooking surface, grill or pedestal grill in a provided picnic area, it shall be accessible. Where multiple cooking features are provided in a picnic area, 50 percent, but no less than 2 shall be accessible.

equal to 1:50? (1:33 maximum allowed for drainage)				☐ Note:
Telescopes/Periscopes	**n/a**	**Yes**	**No**	**Telescopes/Periscopes**
☒ Check here if section does not apply to this park and move to next section.				
69. Are at least 20%, but not less than one, telescope or periscope that complies with ADAAG 4.27?	☐	☐	☐	☐ Repair as needed ☐ Note:
70. Are the eye pieces usable from a seated position?	☐	☐	☐	☐ Repair as needed ☐ Note:
71. Is the ground surface firm and stable?	☐	☐	☐	☐ Repair as needed ☐ Note:
72. Is the maneuvering space less than or equal to 1:50? (1:33 maximum allowed for drainage)	☐	☐	☐	☐ Repair as needed ☐ Note:
Benches	**n/a**	**Yes**	**No**	**Benches**
☐ Check here if section does not apply to this park and move to next section.				
73. Where multiple benches are provided, are at least 50% consistent with this section?	☐	☒	☐	☐ Repair as needed ☐ Note: **only 1 bench**
74. Are accessible benches dispersed evenly throughout the park?	☐	☒	☐	☐ Disperse benches evenly throughout the park ☐ Note: just at play area
75. Of the accessible benches that are provided, do at least 50% of those benches have armrests consistent with ADAAG 4.26.3?	☐	☐	☒	☐ Repair as needed ☐ Note:
76. Are the front edges of accessible benches between 17 and 19 inches maximum above the ground/floor?	☐	☒	☐	☐ Repair as needed ☐ Note:
77. Are floor spaces adjacent to benches consistent with ADAAG 4.2.4?	☐	☒	☐	☐ Repair as needed ☐ Note:
78. Is the ground/floor surface around the accessible benches firm and stable?	☐	☒	☐	☐ Repair as needed ☐ Note:
79. Do all accessible benches have back support the full length of the bench?	☐	☒	☐	☐ Repair as needed ☒ Note: **4 of 5 benches**
Playground Equipment Accessibility	**n/a**	**Yes**	**No**	**Playground Equipment Accessibility**
☐ Check here if section does not apply to this park and move to next section.				
80. Is there at least one of each play component on an accessible route[3]?	☐	☒	☐	☐ Expand existing accessible routes as needed ☐ Construct accessible routes ☐ Note: bark surface
81. Is there at least one of each ground-level play component on an accessible route?	☐	☒	☐	☐ Expand existing accessible routes as needed ☐ Construct accessible routes ☐ Note:
82. Are the play components integrated for use by all children; including those with disabilities?	☐	☒	☐	☐ Ensure play components on accessible routes can be used by all children ☐ Note:
Trails	**n/a**	**Yes**	**No**	**Trails**

[3] Different types of play components are based on the general experience provided by the play component. Different types include, but are no limited to, rocking, swinging, climbing, spinning and sliding. Components may be elevated or at or below ground level.

☐ Check here if section does not apply to this park and move to next section.				
83. Is the clear width of the trail 36 inches?	☐	☒	☐	☐ Renovate as required ☐ Construct all new trails to code ☐ Note:
84. Are openings in the trail less than ½ inch? *Note: (Board slat spaces, etc. – Elongated openings should be placed so that the long dimension is perpendicular or diagonal to the dominate direction of travel.)*	☐	☒	☐	☐ Renovate as required ☐ Construct all new trails to code ☐ Note:
85. Is the trail free of constructed or natural barriers?	☐	☒	☐	☐ Remove as needed ☐ Note:
86. Are all overhead hazards maintained at a height that is sufficient for all expected users of the trail? (Remember, Objects that protrude into a pathway at a height greater than 27" are difficult for the blind or persons with visual disabilities who use canes to detect.)	☐	☒	☐	☐ Renovate as required ☐ Construct all new trails to code ☐ Note:
87. Is there a segment in the trail that has a 10% grade for more than 30 feet?	☐	☒	☐	☐ Construct level rest interval[4] ☐ Note:
88. Are all cross slopes a maximum of 3%?	☐	☒	☐	☐ Renovate as required ☐ Construct all new trails to code ☐ Note:
89. Are all tread obstacles a maximum of 1"?	☐	☒	☐	☐ Renovate as required ☐ Construct all new trails to code ☐ Note:
90. Are passing spaces (6" x 60") provided at maximum intervals of 200 ft. whenever the clear tread width is less then 60"?	☐	☒	☐	☐ Renovate as required ☐ Construct all new trails to code ☐ Note:
91. Does the trail have or require edge protection?	☐	☐	☒	☐ Renovate as required – Where provided, edge protection should be a minimum of 3". ☐ Construct all new trails to code ☐ Note:
92. Does the trail have signs that clearly indicate the type of use, rules and difficult conditions for the trail?	☐	☐	☒	☐ Renovate as required ☐ Construct all new trails to code ☐ Note:
93. Are there signs that warn users that changes in trail level or tread obstacles could not be removed?	☐	☐	☒	☐ Renovate as required ☐ Construct all new trails to code ☐ Note:
94. Are there detectable warnings anywhere a route crosses a traffic way?	☐	☐	☒	☐ Repair as needed ☐ Note: **Missing at Bartlett gate**
Shooting Facilities	**n/a**	**Yes**	**No**	**Shooting Facilities**
☒ Check here if section does not apply to this park and move to next section.				
95. Does the English Pit range have 60-inch diameter space with slopes not steeper than 1:48 so a wheelchair can turn around?	☐	☐	☐	☐ Renovate as needed ☐ Install accessible seating area ☐ Note
96. Do the firing benches have a wheelchair	☐	☐	☐	☐ Renovate as needed

[4] Resting intervals must be 60" minimum on length and at least as wide as the widest portion of the trail segment leading to the resting interval with a cross slope that does not exceed 3%.

accessible area with a bench between 27 and 34 inches with a minimum of 19" leg space?				☐ Install accessible seating area ☐ Note
97. If fixed firing positions are provided, at least 5% but not less than one of each type of firing position, must be served by an accessible route. Does English Pit have an accessible route?	☐	☐	☐	☐ Renovate as needed ☐ Install accessible route ☐ Note
98. Does the park have accessible routes to all target impact areas?	☐	☐	☐	☐ Expand existing accessible routes as needed ☐ Construct accessible routes ☐ Note:
Aquatic Recreation Facilities	**n/a**	**Yes**	**No**	**Aquatic Recreation Facilities**
☒ Check here if section does not apply to this park and move to next section.				
99. Is there an accessible route (36" wide) over beach areas that allow access to the water's edge?	☐	☐	☐	☐ Renovate as needed ☐ Install accessible route ☐ Note
100. Are there accessible routes with handrails that lead into designated swim areas such as ponds, lakes, etc.	☐	☐	☐	☐ Renovate as needed ☐ Install accessible route ☐ Note
Fishing piers and Platforms	**n/a**	**Yes**	**No**	**Fishing piers and Platforms**
☒ Check here if section does not apply to this park and move to next section.				
101. Does this park have a facility specifically designed and constructed for fishing?	☐	☐	☐	(Structures that were not built specifically for fishing do not need to meet ADAAG guidelines. Structures designed as fishing piers or platforms, must have an accessible route.)
102. Does the park have a gangway serving the fishing pier or platform?	☐	☐	☐	☐ Install a gangway platform – Gangway 1:12 maximum slope or at least 30 feet long. ☐ Renovate existing platform to meet code (Check specific building codes) ☐ Note
103. Does the gangway have a transition plate to the pier or platform that meets code?	☐	☐	☐	☐ Install a transition plate[5] ☐ Adjust existing transition plate to meet code ☐ Note
104. Does the gangway have handrails?	☐	☐	☐	☐ Install handrail to meet code ☐ Ensure existing rails meet code ☐ Note
105. Does the fishing pier or platform have railings, guards or handrails[6]?	☐	☐	☐	☐ Install as needed ☐ Renovate existing structure to meet code ☐ Note
106. Does the fishing pier or platform have edge protection[i]?	☐	☐	☐	☐ Install ☐ Renovate existing edge protection ☐ Note

[5] Gangways are not required to have to have landings at the end, if transition plates are provided. If the slope of the transition plate is greater that 1: 20 (5%), the transition plates must have a landing at the end of the transition plate not connected to the gangway and must comply with other ramp requirements.

[6] Where railings, guards or handrails are provided on a fishing pier or platform, at least 25 % of the rails must be 34 inches or less in height above the ground or dock so accommodate a person in a wheelchair. These railings must be dispersed as equally as possible to all areas of the fishing pier.

107. Does the fishing pier or platform have clear floor or ground space[ii]?	☐	☐	☐	☐ Install ☐ Renovate existing edge protection ☐ Note
108. Does the fishing pier or platform have sufficient turning space[iii]?	☐	☐	☐	☐ Install ☐ Renovate existing edge protection ☐ Note
Boating Facilities	**n/a**	**Yes**	**No**	**Boating Facilities**
☒ Check here if section does not apply to this park and move to next section.				
109. Is there an accessible route to the boating facilities?	☐	☐	☐	☐ Install ☐ Renovate existing route ☐ Note
110. Does the gangway to the dock or floating dock deigned to provide for a maximum 1:12 (8.33%) slope ? *Note: Not required to be longer than 80 feet. (Elevators may be used in lieu of gangways) In smaller facilities with less than 25 boat slips, the slope of the gangway may exceed 1:12, if the gangway is at least 30 feet long.*	☐	☐	☐	☐ Install ☐ Renovate existing route ☐ Note
111. Does the gangway have a transition plate to the pier or platform that meets code[iv]?	☐	☐	☐	☐ Install a transition plate ☐ Adjust existing transition plate to meet code ☐ Note

<table>
<tr><td>112. Where boat slips[7] are provided, does the number of accessible slips[8] comply with the table to the right?
Note: If boat slips at a facility are not identified or demarcated by length, each 40 feet of boat slip edge along the perimeter of a pier will be counted as one boat slip</td><td>☐</td><td>☐</td><td>☐</td><td>
<table>
<tr><th colspan="2">Number of Accessible Boat Slips Required</th></tr>
<tr><td>Total Slips in Facility</td><td>Minimum Accessible Slips</td></tr>
<tr><td>1-25</td><td>1</td></tr>
<tr><td>26-50</td><td>2</td></tr>
<tr><td>50-100</td><td>3</td></tr>
<tr><td>101-150</td><td>4</td></tr>
</table>
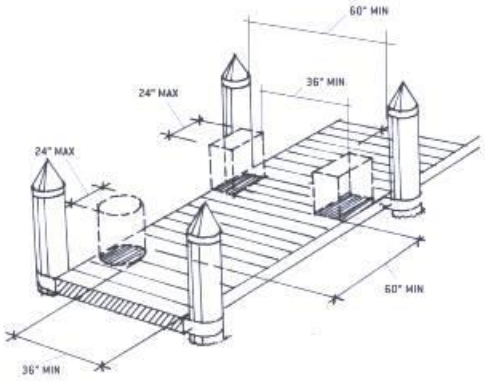

PIER CLEARANCE SPACE REDUCTION
</td></tr>
<tr><td>If the facility only has a boarding pier (see footnote # 9) at least 5% but not less than, must comply with these guidelines. The entire length of accessible boarding piers must comply with the same provisions that apply to slips.

113. Does this facility meet this regulation?</td><td>☐</td><td>☐</td><td>☐</td><td>☐ Install
☐ Renovate boarding pier
☐ Note</td></tr>
<tr><td>114. Is this facility compromised only of a boat launch with no boarding ramp or pier?</td><td>☐</td><td>☐</td><td>☐</td><td>If yes, there are no specific provisions that address access to launch ramps without boarding piers.</td></tr>
</table>

[7] A boat slip is the portion of a pier, main pier, finger pier, or float where a boat is berthed or moored, or used for embarking or disembarking. Boarding piers that are not part of a boat launch ramp are classified as “boat slips” for the purpose of this survey.

[8] Accessible boat slips must have clear pier space at least 60 inches wide and as long as the slip. Every 10 feet of linear pier edge serving the accessible slips must have at least one continuous clear opening that is at least 60 inches wide. The width of the clear pier space may be 36 inches wide for a length of 24 inches, as long as multiple 36-inch segments are separated by segments that are 60 inches minimum clear in width and 60 inches minimum clear in length, and the clear openings are at least 60 inches deep. Edge protection is not required

Item Number	Notes

4.2.3* Wheelchair Turning Space. The space required for a wheelchair to make a 180-degree turn is a clear space of 60 in (1525 mm) diameter (see Fig. 3(a)) or a T-shaped space (see Fig. 3(b)). Appendix Note

4.2.4* Clear Floor or Ground Space for Wheelchairs.

4.2.4.1 Size and Approach. The minimum clear floor or ground space required to accommodate a single, stationary wheelchair and occupant is 30 in by 48 in (760 mm by 1220 mm) (see Fig. 4(a)). The minimum clear floor or ground space for wheelchairs may be positioned for forward or parallel approach to an object (see Fig. 4(b) and (c)). Clear floor or ground space for wheelchairs may be part of the knee space required under some objects.

4.2.4.2 Relationship of Maneuvering Clearance to Wheelchair Spaces. One full unobstructed side of the clear floor or ground space for a wheelchair shall adjoin or overlap an accessible route or adjoin another wheelchair clear floor space. If a clear floor space is located in an alcove or otherwise confined on all or part of three sides, additional maneuvering clearances shall be provided as shown in Fig. 4(d) and (e).

4.2.4.3 Surfaces for Wheelchair Spaces. Clear floor or ground spaces for wheelchairs shall comply with 4.5. Appendix Note

4.16.3* Height. The height of water closets shall be 17 in to 19 in (430 mm to 485 mm), measured to the top of the toilet seat (see Fig. 29(b)). Seats shall not be sprung to return to a lifted position. Appendix Note

4.16.4* Grab Bars. Grab bars for water closets not located in stalls shall comply with 4.26 and Fig. 29. The grab bar behind the water closet shall be 36 in (915 mm) minimum. Appendix Note

4.26.3 Structural Strength. The structural strength of grab bars, tub and shower seats, fasteners, and mounting devices shall meet the following specification:

(1) Bending stress in a grab bar or seat induced by the maximum bending moment from the application of 250 lbf (1112N) shall be less than the allowable stress for the material of the grab bar or seat.

(2) Shear stress induced in a grab bar or seat by the application of 250 lbf (1112N) shall be less than the allowable shear stress for the material of the grab bar or seat. If the connection between the grab bar or seat and its mounting bracket or other support is considered to be fully restrained, then direct and torsional shear stresses shall be totaled for the combined shear stress, which shall not exceed the allowable shear stress.

(3) Shear force induced in a fastener or mounting device from the application of 250 lbf (1112N) shall be less than the allowable lateral load of either the fastener or mounting device or the supporting structure, whichever is the smaller allowable load.

(4) Tensile force induced in a fastener by a direct tension force of 250 lbf (1112N) plus the maximum moment from the application of 250 lbf (1112N) shall be less than the allowable withdrawal load between the fastener and the supporting structure.

(5) Grab bars shall not rotate within their fittings.

4.27 Controls and Operating Mechanisms.

4.27.1 General. Controls and operating mechanisms required to be accessible by 4.1 shall comply with 4.27.

4.27.2 Clear Floor Space. Clear floor space complying with 4.2.4 that allows a forward or a parallel approach by a person using a wheelchair shall be provided at controls, dispensers, receptacles, and other operable equipment.

4.27.3* Height. The highest operable part of controls, dispensers, receptacles, and other operable equipment shall be placed within at least one of the reach ranges specified in 4.2.5 and 4.2.6. Electrical and communications system receptacles on walls shall be mounted no less than 15 in (380 mm) above the floor. Appendix Note

EXCEPTION: These requirements do not apply where the use of special equipment dictates otherwise or where electrical and communications systems receptacles are not normally intended for use by building occupants.

4.27.4 Operation. Controls and operating mechanisms shall be operable with one hand and shall not require tight grasping, pinching, or twisting of the wrist. The force required to activate controls shall be no greater than 5 lbf (22.2 N).

---

[i] Where railings, guards or handrails are provided, edge protection must be provided and extended a minimum of 2 inches above the ground or deck surface. Edge protection is not required where a railing, guardrail or handrail is provided, if the deck surface extends a minimum of 12 inches beyond the inside face of the railing.

[ii] At least one clear floor or ground space (30 inches by 48 inches) must be provided at each location that has a railing height of 34 inches maximum. If there is no railing, at least one clear space must be provided on a pier or platform.

[iii] Fishing piers and platforms must have at least one turning area, either 60-inch turning space or a T-shaped space to allow a person using a mobility device or wheelchair to make a 180-degree turn.

[iv] Gangways are not required to have to have landings at the end, if transition plates are provided. If the slope of the transition plate is greater that 1: 20 (5%), the transition plates must have a landing at the end of the transition plate not connected to the gangway and must comply with other ramp requirements.

ADA Compliance Program

MEDFORD PARKS AND RECREATION DEPARTMENT

ADA ACCESSIBILITY SURVEY FOR PARK FACILITIES

Date: **March 2, 2016** **Estimated Cost:**

Facility: **Lone Pine Park** **Department Notified:**

Survey by: **Jean Akers** **Date of Notification:**

Check all applicable building codes and ADAAG publications prior to any renovation or construction. This survey is only a guideline.

ITEM				RECOMMENDATIONS
Accessible Routes[1]	**n/a**	**Yes**	**No**	**Accessible Routes**
☐ Check here if section does not apply to this park and move to next section.				
1. Does the park have accessible routes to all accessible facilities within the park?	☐	☐	☒	☐ Expand existing accessible routes as needed ☐ Construct accessible routes ☒ Note: **Portion of trail to spray park needs ramp**
2. Where court sports are provided (i.e. tennis, basketball, and volleyball) are there accessible routes to each court? (Routes must connect both sides of the court)	☒	☐	☐	☐ Expand existing accessible routes as needed ☐ Construct accessible routes ☐ Note**:**
3. Are there accessible routes to any and all animal containment areas?	☒	☐	☐	☐ Expand existing accessible routes as needed ☐ Construct accessible routes ☐ Note:
4. Are there detectable warnings anywhere a route crosses a traffic way?	☐	☐	☒	☐ Repair as needed ☐ Note: **Add warning strip at trail bollards**
ITEM				**RECOMMENDATIONS**
Parking and Drop-off Areas	**n/a**	**Yes**	**No**	**Parking and Drop-off Areas**
☐ Check here if section does not apply to this park and move to next section.				
5. Are an adequate number of accessible parking spaces available? The table below gives the ADAAG requirement for new construction and alterations (for lots with more than 100 spaces refer to ADAAG). Accessible Spaces per Overall spaces	☐	☒	☐	☐ Reconfigure a reasonable number of spaces by repainting stripes. ☐ Construct accessible routes ☐ Note:

Total Spaces	Accessible Spaces Required
1 to 25	1 space
26 to 50	2 spaces
51 to 75	3 spaces
76 to 100	4 spaces

[1] Accessible routes must comply with ADAAG provisions for the location, width (minimum 36 inches) passing space, head room, surface, slope (Maximum 1:12 (or 8.33%). Accessible routes must connect all accessible elements within the facility. Accessible routes must be stable, firm and slip resistant. There is no requirement to change the surface of a playing field to an accessible surface.

6. Are an adequate number of van accessible spaces provided? At least 1 of every 8 accessible spaces must be van-accessible (with a minimum of 1 van-accessible space in all cases.)	☐	☒	☐	☐ Reconfigure to provide van-accessible space(s).
7. Are the access aisles part of the accessible route?	☐	☒	☐	☐ Add curb ramps. ☐ Reconstruct sidewalk
8. Are the accessible spaces closest to the accessible entrance?	☐	☒	☐	☐ Reconfigure spaces.
9. Are accessible spaces marked with and International Symbol of Accessibility? Are there signs reading "Van Accessible" at van spaces?	☐	☒	☐	☐ Add signs, placed so that they are not obstructed by cars.
10. Is there an enforcement procedure to ensure that accessible parking is used only by those who need it?	☐	☒	☐	☐ Implement a policy to check periodically for violators and report them to the proper authorities.
Team Player Seating Areas	**n/a**	**Yes**	**No**	**Team Player Seating Areas**
☒ Check here if section does not apply to this park and move to next section.				
11. Do fixed team or player seating areas contain the required number of wheelchair spaces and companion seats required by ADAAG?	☐	☐	☐	☐ Renovate as needed ☐ Install accessible seating area ☐ Note
Restrooms	**n/a**	**Yes**	**No**	**Restrooms**
☐ Check here if section does not apply to this park and move to next section.				
12. If rest rooms are available to the public, is at least one rest room (either one for each sex, or unisex) fully accessible?	☐	☒	☐	☐ Reconfigure rest room. ☐ Combine rest rooms to create one unisex accessible rest room. ☐ Note:
13. Are there signs at inaccessible rest rooms that give directions to accessible ones?	☒	☐	☐	☐ Install accessible signs. ☐ Note:
14. Is there tactile signage identifying rest rooms? *Note: Mount signs on the wall, on the latch side of the door, complying with the permanent signage.*	☐	☒	☐	☐ Add accessible signage, placed to the side of the door, 60 inches to centerline (not on the door itself). ☐ If symbols are used, add supplementary verbal signage. ☐ Note:
15. Are pictograms or symbols used to identify rest rooms, and, if used, are raised characters and braille included below?	☐	☒	☐	☐ If symbols are used, add supplementary verbal signage with raised characters and braille below pictogram symbol. ☐ Note:
16. Is the doorway at least 32 inches clear?	☐	☒	☐	☐ Install offset (swing-clear) hinges. ☐ Widen the doorway. ☐ Note:
17. Are doors equipped with accessible handles (operable with a closed fist), 48 inches high or less?	☐	☒	☐	☐ Lower handles. ☐ Replace knobs or latches with lever or loop handles. ☐ Add lever extensions. ☐ Install power-assisted or automatic door openers. ☐ Note:

18. Can doors be opened easily (5 lbf maximum force)?	☒	☐	☐	☐ Adjust or replace closers. ☐ Install lighter doors. ☐ Install power-assisted or automatic door openers. ☐ Note: **Closed for winter**
19. Does the entry configuration provide adequate maneuvering space for a person using a wheelchair? *Note: A person using a wheelchair needs 36 inches of clear width for forward movement, and a 5-foot diameter clear space or a T-shaped space to make turns. A minimum distance of 48 inches clear of the door swing is needed between the two doors of an entry vestibule.*	☐	☐	☐	☐ Rearrange furnishings such as chairs and trash cans. ☐ Remove inner door if there is a vestibule with two doors. ☐ Move or remove obstructing partitions. ☐ Note:
20. Is there a 36-inch-wide path to all fixtures?	☐	☐	☐	☐ Remove obstructions. ☐ Note:
21. Is the stall door operable with a closed fist, inside and out?	☐	☐	☐	☐ Replace inaccessible knobs with lever or loop handles. ☐ Add lever extensions. ☐ Note:
22. Is there a wheelchair-accessible stall that has an area of at least 5 feet by 5 feet, clear of the door swing, OR is there a stall that is less accessible but that provides greater access than a typical stall (either 36 by 69 inches or 48 by 69 inches)?	☐	☐	☐	☐ Move or remove partitions. ☐ Reverse the door swing if it is safe to do so. ☐ Note:
23. In the accessible stall, are there grab bars behind and on the side wall nearest to the toilet?	☐	☐	☐	☐ Add grab bars. ☐ Note:
24. Is the toilet seat 17 to 19 inches high?	☐	☐	☐	☐ Add raised seat. ☐ Note:
25. Does one lavatory have a 30-inch-wide by 48-inch-deep clear space in front? *Note: A maximum of 19 inches of the required depth may be under the lavatory.*	☐	☐	☐	☐ Rearrange furnishings. ☐ Replace lavatory. ☐ Remove or alter cabinetry to provide space underneath. Make sure hot pipes are covered. ☐ Move a partition or wall. ☐ Note:
26. Is the lavatory rim no higher than 34 inches?	☐	☐	☐	☐ Adjust or replace lavatory. ☐ Note:
27. Is there at least 29 inches from the floor to the bottom of the lavatory apron? (Excluding pipes)?	☐	☐	☐	☐ Adjust or replace lavatory. ☐ Note:
28. Can the faucet be operated with one closed fist?	☐	☐	☐	☐ Replace faucet handles with paddle type. ☐ Note:
29. Are soap and other dispensers and hand dryers within reach ranges (see page 7) and usable with one closed fist?	☐	☐	☐	☐ Lower dispensers. ☐ Replace with or provide additional accessible dispensers. ☐ Note:
30. Is the mirror mounted with the bottom edge of the reflecting surface 40 inches high or lower?	☐	☐	☐	☐ Lower or tilt down the mirror. ☐ Add a larger mirror anywhere in the room. ☐ Note:
Pit Toilets	**n/a**	**Yes**	**No**	**Pit Toilets**

31.				
☒ Check here if section does not apply to this park and move to next section.				
32. Is there a clear space of 60 inches by 60 inches adjacent to the toilet?	☐	☐	☐	☐ Repair as needed ☐ Note:
33. Does the height of the pit toilet riser comply with ADAAG 4.16.3?	☐	☐	☐	☐ Repair as needed ☐ Note:
34. Is the maneuvering space less than or equal to 1:50? (1:33 maximum allowed for drainage)	☐	☐	☐	☐ Repair as needed ☐ Note:
35. If the pit toilet has walls, are grab bars installed consistent with ADAAG 4.16.4?	☐	☐	☐	☐ Repair as needed ☐ Note:
36. Is the surface adjacent to the pit toilet firm and stable?	☐	☐	☐	☐ Repair as needed ☐ Note:
Utilities	**n/a**	**Yes**	**No**	**Utilities**
☒ Check here if section does not apply to this park and move to next section.				
37. Is the maneuvering space less than or equal to 1:50? (1:33 maximum allowed for drainage)	☐	☐	☐	☐ Repair as needed ☐ Note:
38. Is the surface adjacent to the utility firm and stable?	☐	☐	☐	☐ Repair as needed ☐ Note:
39. Are fixed water spouts located 28 inches minimum to 36 inches maximum above the ground or floor space?	☐	☐	☐	☐ Repair as needed ☐ Note:
40. Is the maneuvering space less than or equal to 1:50? (1:33 maximum allowed for drainage)	☐	☐	☐	☐ Repair as needed ☐ Note:
Drinking Fountains	**n/a**	**Yes**	**No**	**Drinking Fountains**
☐ Check here if section does not apply to this park and move to next section.				
41. Is there at least one fountain with clear floor space of at least 30 by 48 inches in front?	☐	☒	☐	☐ Clear more room by rearranging or removing furnishings. ☐ Note:
42. Is there one fountain with its spout no higher than 36 inches from the ground, and another with a standard height spout (or a single "hi-lo" fountain)?	☐	☒	☐	☐ Provide cup dispensers for fountains with spouts that are too high. ☐ Provide accessible water cooler. ☐ Note:
43. Are controls mounted on the front or on the side near the front edge, and operable with one closed fist?	☐	☒	☐	☐ Replace the controls. ☐ Note:
44. Is each water fountain cane-detectable (located within 27 inches off the floor or protruding less than 4 inches from the wall, into the circulation path?	☐	☐	☒	☐ Place a planter or other cane-detectable barrier on each side at floor level. ☒ Note: **Clearance height at 27.25"**
Telephones	**n/a**	**Yes**	**No**	**Telephones**
☒ Check here if section does not apply to this park and move to next section.				
45. If pay or public use phones are provided, is there clear floor space of at least 30 by 48 inches in front of at least one?	☐	☐	☐	☐ Move furnishings. ☐ Replace booth with open station. ☐ Note:
46. Is the highest operable part of the phone no higher than 48 inches (up to 54 inches if a side approach is possible)?	☐	☐	☐	☐ Lower telephone. ☐ Note:
47. Does the phone protrude no more than 4	☐	☐	☐	☐ Place a cane-detectable barrier on each

inches into the circulation space?				side at floor level. ☐ Note:
48. Does the phone have push-button controls?	☐	☐	☐	☐ Contact phone company to install push-buttons. ☐ Note:
49. Is the phone hearing-aid compatible?	☐	☐	☐	☐ Contact phone company to replace with hearing-aid compatible phone. ☐ Note:
50. Is the phone adapted with volume control?	☐	☐	☐	☐ Contact the phone company to add volume control. ☐ Note:
51. Is the phone with volume control identified with appropriate signage?	☐	☐	☐	☐ Add signage. ☐ Note:
52. If there are four or more public phones in the building, is one of the phones equipped with a text telephone (TT or TDD)?	☐	☐	☐	☐ Install a text telephone. ☐ Have a portable text telephone available. ☐ Provide a shelf and outlet next to phone. ☐ Note:
53. Is the location of the text telephone identified by accessible signage bearing the International TDD Symbol?	☐	☐	☐	☐ Add signage. ☐ Note:

Directional and Informational Signage	**n/a**	**Yes**	**No**	**Directional and Informational Signage**
☐ Check here if section does not apply to this park and move to next section.				
54. If mounted about 80 inches, do they have letters at least 3 inches high, with high contrast, and non-glare finish?	☐	☐	☒	☒ Review requirements and replace signs as needed, meeting the requirements for character size, contrast, and finish. ☒ Note: Rules sign
55. Do directional and informational signs comply with legibility requirements? 56. (Building directories or temporary signs need not comply.)	☐	☐	☒	☒ Review requirements and replace signs as needed, meeting the requirements for character size, contrast, and finish. ☐ Note:

Seats, Tables and Counters	**n/a**	**Yes**	**No**	**Seats, Tables and Counters**
☐ Check here if section does not apply to this park and move to next section.				
50. Are the spaces for wheelchair seating distributed throughout? (Cover or uncovered gathering areas, bleachers) 4 tables in shelter/ 1 w/ W/C space 1 table in grass	☐	☐	☒	☒ Rearrange tables to allow room for wheelchairs in seating areas throughout the area. ☐ Remove some fixed seating. ☒ Note: **Replace 2 tables w/ W/C space**
51. If picnic tables are provided, are at least 50% and no less than two of the tables, accessible?	☐	☐	☒	☒ Replace as needed ☐ Note:
52. Are knee spaces at accessible picnic tables at least 27 inches high, 30 inches wide, and 19 inches deep?	☐	☒	☐	☐ Replace or raise tables. ☐ Note:
53. Are picnic tables spaced such that all areas of the table are accessible?	☐	☐	☒	☒ Rearrange tables to allow room for wheelchairs in seating areas throughout the area. ☐ Remove some fixed seating. ☐ Note:
54. At each type of cashier counter, is there a portion of the main counter that is no more than 36 inches high?	☒	☐	☐	☐ Provide a lower auxiliary counter or folding shelf. ☐ Arrange the counter and surrounding

				furnishings to create a space to hand items back and forth. ☐ Note:
55. Is there a portion of food-ordering counters that is no more than 36 inches high, or is there space at the side for passing items to customers who have difficulty reaching over a high counter?	☒	☐	☐	☐ Lower section of counter. ☐ Arrange the counter and surrounding furnishings to create a space to pass items. ☐ Note:
Fire Rings	**n/a**	**Yes**	**No**	**Fire Rings**
☒ Check here if section does not apply to this park and move to next section.				
56. Do all fire rings have a clear space extending a minimum 48" deep by 48" wide at all usable portions of the ring?	☐	☐	☐	☐ Install clear spaces as needed ☐ Note:
57. Are the clear spaces around the fire pit on a firm and stable surface?	☐	☐	☐	☐ Correct as needed ☐ Note:
58. Is the fire surface height a minimum of 9" above the ground/floor?	☐	☐	☐	☐ Construct or renovate pits to meet clearances ☐ Note:
59. Are the slopes around fire pits not more than 1:50?	☐	☐	☐	☐ Construct or renovate pits to meet clearances ☐ Note:
Cooking Surfaces, Grills, Pedestal Grills[2]	**n/a**	**Yes**	**No**	**Cooking Surfaces, Grills, Pedestal Grills**
☒ Check here if section does not apply to this park and move to next section.				
60. Are accessible cooking features dispersed throughout the area and among the types provided?	☐	☐	☐	☐ Evenly disperse cooking features ☐ Note:
61. Are accessible cooking feature surfaces installed between 15 inches and 34 inches above the ground/floor?	☐	☐	☐	☐ Install as required ☐ Note:
62. Do operating controls and mechanisms comply with current ADAAG 4.27.1 (General) 4.27.2 (Clear Floor Space and 4.27.3 (Height)?	☐	☐	☐	☐ Install as required ☐ Note:
Fixed Trash/Recycling Containers	**n/a**	**Yes**	**No**	**Fixed Trash/Recycling Containers**
☐ Check here if section does not apply to this park and move to next section.				
63. Are trash and recycling containers accessible and do they comply with ADAAG 4.27?	☐	☒	☐	☐ Replace as needed ☐ Note:
Overlooks/Viewing Areas	**n/a**	**Yes**	**No**	**Overlooks/Viewing Areas**
☐ Check here if section does not apply to this park and move to next section.				
64. Are all viewing areas on an accessible route?	☐	☒	☐	☐ Install accessible paths as needed ☐ Note:
65. Are all viewing areas constructed to provide an unobstructed view?	☐	☒	☐	☐ Repair as needed ☐ Note:
66. Is there at least one maneuvering space that complies with ADAAG 4.2.3?	☐	☒	☐	☐ Repair as needed ☐ Note:
67. Is the ground surface firm and stable?	☐	☒	☐	☐ Repair as needed

[2] Where there is only one cooking surface, grill or pedestal grill in a provided picnic area, it shall be accessible. Where multiple cooking features are provided in a picnic area, 50 percent, but no less than 2 shall be accessible.

				☐ Note:
68. Is the maneuvering space less than or equal to 1:50? (1:33 maximum allowed for drainage)	☐	☒	☐	☐ Repair as needed ☐ Note:
Telescopes/Periscopes	**n/a**	**Yes**	**No**	**Telescopes/Periscopes**
☒ Check here if section does not apply to this park and move to next section.				
69. Are at least 20%, but not less than one, telescope or periscope that complies with ADAAG 4.27?	☐	☐	☐	☐ Repair as needed ☐ Note:
70. Are the eye pieces usable from a seated position?	☐	☐	☐	☐ Repair as needed ☐ Note:
71. Is the ground surface firm and stable?	☐	☐	☐	☐ Repair as needed ☐ Note:
72. Is the maneuvering space less than or equal to 1:50? (1:33 maximum allowed for drainage)	☐	☐	☐	☐ Repair as needed ☐ Note:
Benches	**n/a**	**Yes**	**No**	**Benches**
☐ Check here if section does not apply to this park and move to next section.				
73. Where multiple benches are provided, are at least 50% consistent with this section?	☐	☐	☒	☐ Repair as needed ☐ Note: **only 1 bench in spray park**
74. Are accessible benches dispersed evenly throughout the park?	☐	☐	☒	☐ Disperse benches evenly throughout the park ☐ Note: **just at spray play**
75. Of the accessible benches that are provided, do at least 50% of those benches have armrests consistent with ADAAG 4.26.3?	☐	☐	☒	☐ Repair as needed ☐ Note:
76. Are the front edges of accessible benches between 17 and 19 inches maximum above the ground/floor?	☐	☒	☐	☐ Repair as needed ☐ Note:
77. Are floor spaces adjacent to benches consistent with ADAAG 4.2.4?	☐	☒	☐	☐ Repair as needed ☐ Note:
78. Is the ground/floor surface around the accessible benches firm and stable?	☐	☒	☐	☐ Repair as needed ☐ Note:
79. Do all accessible benches have back support the full length of the bench?	☐	☐	☒	☐ Repair as needed ☐ Note:
Playground Equipment Accessibility	**n/a**	**Yes**	**No**	**Playground Equipment Accessibility**
☒ Check here if section does not apply to this park and move to next section.				
80. Is there at least one of each play component on an accessible route[3]?	☐	☐	☐	☐ Expand existing accessible routes as needed ☐ Construct accessible routes ☐ Note: bark surface
81. Is there at least one of each ground-level play component on an accessible route?	☐	☐	☐	☐ Expand existing accessible routes as needed ☐ Construct accessible routes ☐ Note:
82. Are the play components integrated for use by all children; including those with	☐	☐	☐	☐ Ensure play components on accessible routes can be used by all children

[3] Different types of play components are based on the general experience provided by the play component. Different types include, but are no limited to, rocking, swinging, climbing, spinning and sliding. Components may be elevated or at or below ground level.

disabilities?				☐ Note:
Trails	**n/a**	**Yes**	**No**	**Trails**
☐ Check here if section does not apply to this park and move to next section.				
83. Is the clear width of the trail 36 inches?	☐	☒	☐	☐ Renovate as required ☐ Construct all new trails to code ☐ Note:
84. Are openings in the trail less than ½ inch? *Note: (Board slat spaces, etc. – Elongated openings should be placed so that the long dimension is perpendicular or diagonal to the dominate direction of travel.)*	☐	☒	☐	☐ Renovate as required ☐ Construct all new trails to code ☐ Note:
85. Is the trail free of constructed or natural barriers?	☐	☒	☐	☐ Remove as needed ☐ Note:
86. Are all overhead hazards maintained at a height that is sufficient for all expected users of the trail? (Remember, Objects that protrude into a pathway at a height greater than 27" are difficult for the blind or persons with visual disabilities who use canes to detect.)	☐	☒	☐	☐ Renovate as required ☐ Construct all new trails to code ☐ Note:
87. Is there a segment in the trail that has a 10% grade for more than 30 feet?	☐	☐	☒	☐ Construct level rest interval[4] ☐ Note:
88. Are all cross slopes a maximum of 3%?	☐	☐	☒	☐ Renovate as required ☐ Construct all new trails to code ☐ Note: **Sections over 4.3-6.2%**
89. Are all tread obstacles a maximum of 1"?	☐	☐	☒	☐ Renovate as required ☐ Construct all new trails to code ☐ Note: **Gaps at Apts access path**
90. Are passing spaces (6" x 60") provided at maximum intervals of 200 ft. whenever the clear tread width is less then 60"?	☒	☐	☐	☐ Renovate as required ☐ Construct all new trails to code ☐ Note:
91. Does the trail have or require edge protection?	☐	☐	☒	☐ Renovate as required – Where provided, edge protection should be a minimum of 3". ☐ Construct all new trails to code ☐ Note:
92. Does the trail have signs that clearly indicate the type of use, rules and difficult conditions for the trail?	☐	☐	☒	☐ Renovate as required ☐ Construct all new trails to code ☐ Note:
93. Are there signs that warn users that changes in trail level or tread obstacles could not be removed?	☐	☐	☒	☐ Renovate as required ☐ Construct all new trails to code ☐ Note:
94. Are there detectable warnings anywhere a route crosses a traffic way?	☐	☐	☒	☐ Repair as needed ☐ Note:
Shooting Facilities	**n/a**	**Yes**	**No**	**Shooting Facilities**
☒ Check here if section does not apply to this park and move to next section.				
95. Does the English Pit range have 60-inch diameter space with slopes not steeper than 1:48 so a wheelchair can turn	☐	☐	☐	☐ Renovate as needed ☐ Install accessible seating area ☐ Note

[4] Resting intervals must be 60" minimum on length and at least as wide as the widest portion of the trail segment leading to the resting interval with a cross slope that does not exceed 3%.

around?				
96. Do the firing benches have a wheelchair accessible area with a bench between 27 and 34 inches with a minimum of 19" leg space?	☐	☐	☐	☐ Renovate as needed ☐ Install accessible seating area ☐ Note
97. If fixed firing positions are provided, at least 5% but not less than one of each type of firing position, must be served by an accessible route. Does English Pit have an accessible route?	☐	☐	☐	☐ Renovate as needed ☐ Install accessible route ☐ Note
98. Does the park have accessible routes to all target impact areas?	☐	☐	☐	☐ Expand existing accessible routes as needed ☐ Construct accessible routes ☐ Note:
Aquatic Recreation Facilities	**n/a**	**Yes**	**No**	**Aquatic Recreation Facilities**
☒ Check here if section does not apply to this park and move to next section.				
99. Is there an accessible route (36" wide) over beach areas that allow access to the water's edge?	☐	☐	☐	☐ Renovate as needed ☐ Install accessible route ☐ Note
100. Are there accessible routes with handrails that lead into designated swim areas such as ponds, lakes, etc.	☐	☐	☐	☐ Renovate as needed ☐ Install accessible route ☐ Note
Fishing piers and Platforms	**n/a**	**Yes**	**No**	**Fishing piers and Platforms**
☒ Check here if section does not apply to this park and move to next section.				
101. Does this park have a facility specifically designed and constructed for fishing?	☐	☐	☐	(Structures that were not built specifically for fishing do not need to meet ADAAG guidelines. Structures designed as fishing piers or platforms, must have an accessible route.)
102. Does the park have a gangway serving the fishing pier or platform?	☐	☐	☐	☐ Install a gangway platform – Gangway 1:12 maximum slope or at least 30 feet long. ☐ Renovate existing platform to meet code (Check specific building codes) ☐ Note
103. Does the gangway have a transition plate to the pier or platform that meets code?	☐	☐	☐	☐ Install a transition plate[5] ☐ Adjust existing transition plate to meet code ☐ Note
104. Does the gangway have handrails?	☐	☐	☐	☐ Install handrail to meet code ☐ Ensure existing rails meet code ☐ Note
105. Does the fishing pier or platform have railings, guards or handrails[6]?	☐	☐	☐	☐ Install as needed ☐ Renovate existing structure to meet code ☐ Note
106. Does the fishing pier or platform have edge protection[i]?	☐	☐	☐	☐ Install ☐ Renovate existing edge protection

[5] Gangways are not required to have to have landings at the end, if transition plates are provided. If the slope of the transition plate is greater that 1: 20 (5%), the transition plates must have a landing at the end of the transition plate not connected to the gangway and must comply with other ramp requirements.

[6] Where railings, guards or handrails are provided on a fishing pier or platform, at least 25 % of the rails must be 34 inches or less in height above the ground or dock so accommodate a person in a wheelchair. These railings must be dispersed as equally as possible to all areas of the fishing pier.

				☐ Note
107. Does the fishing pier or platform have clear floor or ground space[ii]?	☐	☐	☐	☐ Install ☐ Renovate existing edge protection ☐ Note
108. Does the fishing pier or platform have sufficient turning space[iii]?	☐	☐	☐	☐ Install ☐ Renovate existing edge protection ☐ Note
Boating Facilities	**n/a**	**Yes**	**No**	**Boating Facilities**
☒ Check here if section does not apply to this park and move to next section.				
109. Is there an accessible route to the boating facilities?	☐	☐	☐	☐ Install ☐ Renovate existing route ☐ Note
110. Does the gangway to the dock or floating dock deigned to provide for a maximum 1:12 (8.33%) slope ? *Note: Not required to be longer than 80 feet. (Elevators may be used in lieu of gangways) In smaller facilities with less than 25 boat slips, the slope of the gangway may exceed 1:12, if the gangway is at least 30 feet long.*	☐	☐	☐	☐ Install ☐ Renovate existing route ☐ Note
111. Does the gangway have a transition plate to the pier or platform that meets code[iv]?	☐	☐	☐	☐ Install a transition plate ☐ Adjust existing transition plate to meet code ☐ Note

<table>
<tr><td>112. Where boat slips[7] are provided, does the number of accessible slips[8] comply with the table to the right?
Note: If boat slips at a facility are not identified or demarcated by length, each 40 feet of boat slip edge along the perimeter of a pier will be counted as one boat slip</td><td>☐</td><td>☐</td><td>☐</td><td>
<table>
<tr><th colspan="2">Number of Accessible Boat Slips Required</th></tr>
<tr><td>Total Slips in Facility</td><td>Minimum Accessible Slips</td></tr>
<tr><td>1-25</td><td>1</td></tr>
<tr><td>26-50</td><td>2</td></tr>
<tr><td>50-100</td><td>3</td></tr>
<tr><td>101-150</td><td>4</td></tr>
</table>
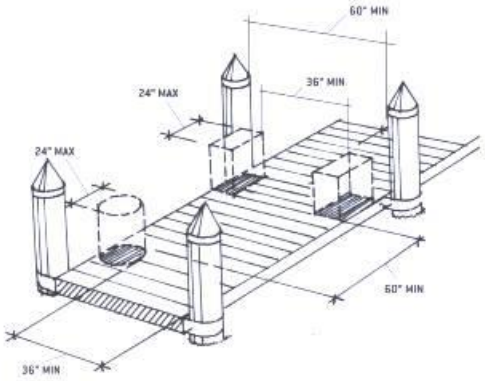

PIER CLEARANCE SPACE REDUCTION
</td></tr>
<tr><td>If the facility only has a boarding pier (see footnote # 9) at least 5% but not less than, must comply with these guidelines. The entire length of accessible boarding piers must comply with the same provisions that apply to slips.

113. Does this facility meet this regulation?</td><td>☐</td><td>☐</td><td>☐</td><td>☐ Install
☐ Renovate boarding pier
☐ Note</td></tr>
<tr><td>114. Is this facility compromised only of a boat launch with no boarding ramp or pier?</td><td>☐</td><td>☐</td><td>☐</td><td>If yes, there are no specific provisions that address access to launch ramps without boarding piers.</td></tr>
</table>

[7] A boat slip is the portion of a pier, main pier, finger pier, or float where a boat is berthed or moored, or used for embarking or disembarking. Boarding piers that are not part of a boat launch ramp are classified as “boat slips” for the purpose of this survey.

[8] Accessible boat slips must have clear pier space at least 60 inches wide and as long as the slip. Every 10 feet of linear pier edge serving the accessible slips must have at least one continuous clear opening that is at least 60 inches wide. The width of the clear pier space may be 36 inches wide for a length of 24 inches, as long as multiple 36-inch segments are separated by segments that are 60 inches minimum clear in width and 60 inches minimum clear in length, and the clear openings are at least 60 inches deep. Edge protection is not required

Item Number	Notes
	Some cross slopes on lower trail exceed 3%.
	Asphalt path has gaps ~ 1” width
	Concrete walk from neighboring apartments connecting to lower trail is cracked and uneven.
	No armrests on bench in spray park.

4.2.3* Wheelchair Turning Space. The space required for a wheelchair to make a 180-degree turn is a clear space of 60 in (1525 mm) diameter (see Fig. 3(a)) or a T-shaped space (see Fig. 3(b)). Appendix Note

4.2.4* Clear Floor or Ground Space for Wheelchairs.

4.2.4.1 Size and Approach. The minimum clear floor or ground space required to accommodate a single, stationary wheelchair and occupant is 30 in by 48 in (760 mm by 1220 mm) (see Fig. 4(a)). The minimum clear floor or ground space for wheelchairs may be positioned for forward or parallel approach to an object (see Fig. 4(b) and (c)). Clear floor or ground space for wheelchairs may be part of the knee space required under some objects.

4.2.4.2 Relationship of Maneuvering Clearance to Wheelchair Spaces. One full unobstructed side of the clear floor or ground space for a wheelchair shall adjoin or overlap an accessible route or adjoin another wheelchair clear floor space. If a clear

floor space is located in an alcove or otherwise confined on all or part of three sides, additional maneuvering clearances shall be provided as shown in Fig. 4(d) and (e).

4.2.4.3 Surfaces for Wheelchair Spaces. Clear floor or ground spaces for wheelchairs shall comply with 4.5. Appendix Note

4.16.3* Height. The height of water closets shall be 17 in to 19 in (430 mm to 485 mm), measured to the top of the toilet seat (see Fig. 29(b)). Seats shall not be sprung to return to a lifted position. Appendix Note

4.16.4* Grab Bars. Grab bars for water closets not located in stalls shall comply with 4.26 and Fig. 29. The grab bar behind the water closet shall be 36 in (915 mm) minimum. Appendix Note

4.26.3 Structural Strength. The structural strength of grab bars, tub and shower seats, fasteners, and mounting devices shall meet the following specification:

(1) Bending stress in a grab bar or seat induced by the maximum bending moment from the application of 250 lbf (1112N) shall be less than the allowable stress for the material of the grab bar or seat.

(2) Shear stress induced in a grab bar or seat by the application of 250 lbf (1112N) shall be less than the allowable shear stress for the material of the grab bar or seat. If the connection between the grab bar or seat and its mounting bracket or other support is considered to be fully restrained, then direct and torsional shear stresses shall be totaled for the combined shear stress, which shall not exceed the allowable shear stress.

(3) Shear force induced in a fastener or mounting device from the application of 250 lbf (1112N) shall be less than the allowable lateral load of either the fastener or mounting device or the supporting structure, whichever is the smaller allowable load.

(4) Tensile force induced in a fastener by a direct tension force of 250 lbf (1112N) plus the maximum moment from the application of 250 lbf (1112N) shall be less than the allowable withdrawal load between the fastener and the supporting structure.

(5) Grab bars shall not rotate within their fittings.

4.27 Controls and Operating Mechanisms.

4.27.1 General. Controls and operating mechanisms required to be accessible by 4.1 shall comply with 4.27.

4.27.2 Clear Floor Space. Clear floor space complying with 4.2.4 that allows a forward or a parallel approach by a person using a wheelchair shall be provided at controls, dispensers, receptacles, and other operable equipment.

4.27.3* Height. The highest operable part of controls, dispensers, receptacles, and other operable equipment shall be placed within at least one of the reach ranges

specified in 4.2.5 and 4.2.6. Electrical and communications system receptacles on walls shall be mounted no less than 15 in (380 mm) above the floor. Appendix Note

> EXCEPTION: These requirements do not apply where the use of special equipment dictates otherwise or where electrical and communications systems receptacles are not normally intended for use by building occupants.

4.27.4 Operation. Controls and operating mechanisms shall be operable with one hand and shall not require tight grasping, pinching, or twisting of the wrist. The force required to activate controls shall be no greater than 5 lbf (22.2 N).

---

[i] Where railings, guards or handrails are provided, edge protection must be provided and extended a minimum of 2 inches above the ground or deck surface. Edge protection is not required where a railing, guardrail or handrail is provided, if the deck surface extends a minimum of 12 inches beyond the inside face of the railing.

[ii] At least one clear floor or ground space (30 inches by 48 inches) must be provided at each location that has a railing height of 34 inches maximum. If there is no railing, at least one clear space must be provided on a pier or platform.

[iii] Fishing piers and platforms must have at least one turning area, either 60-inch turning space or a T-shaped space to allow a person using a mobility device or wheelchair to make a 180-degree turn.

[iv] Gangways are not required to have to have landings at the end, if transition plates are provided. If the slope of the transition plate is greater that 1: 20 (5%), the transition plates must have a landing at the end of the transition plate not connected to the gangway and must comply with other ramp requirements.

ADA Compliance Program

MEDFORD PARKS AND RECREATION DEPARTMENT

ADA ACCESSIBILITY SURVEY FOR PARK FACILITIES

Date: **March 4, 2016** **Estimated Cost:**

Facility: **Orchard Hill Park** **Department Notified:**

Survey by: **Jean Akers** **Date of Notification:**

Check all applicable building codes and ADAAG publications prior to any renovation or construction. This survey is only a guideline.

ITEM				RECOMMENDATIONS
Accessible Routes[1]	**n/a**	**Yes**	**No**	**Accessible Routes**
☐ Check here if section does not apply to this park and move to next section.				
1. Does the park have accessible routes to all accessible facilities within the park?	☐	☐	☒	☐ Expand existing accessible routes as needed ☐ Construct accessible routes ☐ Note:
2. Where court sports are provided (i.e. tennis, basketball, and volleyball) are there accessible routes to each court? (Routes must connect both sides of the court)	☒	☐	☐	☐ Expand existing accessible routes as needed ☐ Construct accessible routes ☐ Note: **Open play field; no improvements**
3. Are there accessible routes to any and all animal containment areas?	☒	☐	☐	☐ Expand existing accessible routes as needed ☐ Construct accessible routes ☐ Note:
4. Are there detectable warnings anywhere a route crosses a traffic way?	☐	☐	☒	☐ Repair as needed ☐ Note:
ITEM				**RECOMMENDATIONS**
Parking and Drop-off Areas	**n/a**	**Yes**	**No**	**Parking and Drop-off Areas**
☐ Check here if section does not apply to this park and move to next section.				
5. Are an adequate number of accessible parking spaces available? The table below gives the ADAAG requirement for new construction and alterations (for lots with more than 100 spaces refer to ADAAG). Accessible Spaces per Overall spaces	☐	☐	☒	☐ Reconfigure a reasonable number of spaces by repainting stripes. ☐ Construct accessible routes ☒ Note: **No H/C sapces provided for park users**

Total Spaces	Accessible Spaces Required
1 to 25	1 space
26 to 50	2 spaces
51 to 75	3 spaces
76 to 100	4 spaces

[1] Accessible routes must comply with ADAAG provisions for the location, width (minimum 36 inches) passing space, head room, surface, slope (Maximum 1:12 (or 8.33%). Accessible routes must connect all accessible elements within the facility. Accessible routes must be stable, firm and slip resistant. There is no requirement to change the surface of a playing field to an accessible surface.

6. Are an adequate number of van accessible spaces provided? At least 1 of every 8 accessible spaces must be van-accessible (with a minimum of 1 van-accessible space in all cases.)	☐	☐	☐	☐ Reconfigure to provide van-accessible space(s).
7. Are the access aisles part of the accessible route?	☐	☐	☐	☐ Add curb ramps. ☐ Reconstruct sidewalk
8. Are the accessible spaces closest to the accessible entrance?	☐	☐	☐	☐ Reconfigure spaces.
9. Are accessible spaces marked with and International Symbol of Accessibility? Are there signs reading "Van Accessible" at van spaces?	☐	☐	☐	☐ Add signs, placed so that they are not obstructed by cars.
10. Is there an enforcement procedure to ensure that accessible parking is used only by those who need it?	☐	☐	☐	☐ Implement a policy to check periodically for violators and report them to the proper authorities.
Team Player Seating Areas	**n/a**	**Yes**	**No**	**Team Player Seating Areas**
☒ Check here if section does not apply to this park and move to next section.				
11. Do fixed team or player seating areas contain the required number of wheelchair spaces and companion seats required by ADAAG?	☐	☐	☐	☐ Renovate as needed ☐ Install accessible seating area ☐ Note
Restrooms	**n/a**	**Yes**	**No**	**Restrooms**
☒ Check here if section does not apply to this park and move to next section.				
12. If rest rooms are available to the public, is at least one rest room (either one for each sex, or unisex) fully accessible?	☐	☐	☐	☐ Reconfigure rest room. ☐ Combine rest rooms to create one unisex accessible rest room. ☐ Note:
13. Are there signs at inaccessible rest rooms that give directions to accessible ones?	☐	☐	☐	☐ Install accessible signs. ☐ Note:
14. Is there tactile signage identifying rest rooms? *Note: Mount signs on the wall, on the latch side of the door, complying with the permanent signage.*	☐	☐	☐	☐ Add accessible signage, placed to the side of the door, 60 inches to centerline (not on the door itself). ☐ If symbols are used, add supplementary verbal signage. ☐ Note:
15. Are pictograms or symbols used to identify rest rooms, and, if used, are raised characters and braille included below?	☐	☐	☐	☐ If symbols are used, add supplementary verbal signage with raised characters and braille below pictogram symbol. ☐ Note:
16. Is the doorway at least 32 inches clear?	☐	☐	☐	☐ Install offset (swing-clear) hinges. ☐ Widen the doorway. ☐ Note:
17. Are doors equipped with accessible handles (operable with a closed fist), 48 inches high or less?	☐	☐	☐	☐ Lower handles. ☐ Replace knobs or latches with lever or loop handles. ☐ Add lever extensions. ☐ Install power-assisted or automatic door openers. ☐ Note:

18. Can doors be opened easily (5 lbf maximum force)?	☐	☐	☐	☐ Adjust or replace closers. ☐ Install lighter doors. ☐ Install power-assisted or automatic door openers. ☐ Note:
19. Does the entry configuration provide adequate maneuvering space for a person using a wheelchair? *Note: A person using a wheelchair needs 36 inches of clear width for forward movement, and a 5-foot diameter clear space or a T-shaped space to make turns. A minimum distance of 48 inches clear of the door swing is needed between the two doors of an entry vestibule.*	☐	☐	☐	☐ Rearrange furnishings such as chairs and trash cans. ☐ Remove inner door if there is a vestibule with two doors. ☐ Move or remove obstructing partitions. ☐ Note:
20. Is there a 36-inch-wide path to all fixtures?	☐	☐	☐	☐ Remove obstructions. ☐ Note:
21. Is the stall door operable with a closed fist, inside and out?	☐	☐	☐	☐ Replace inaccessible knobs with lever or loop handles. ☐ Add lever extensions. ☐ Note:
22. Is there a wheelchair-accessible stall that has an area of at least 5 feet by 5 feet, clear of the door swing, OR is there a stall that is less accessible but that provides greater access than a typical stall (either 36 by 69 inches or 48 by 69 inches)?	☐	☐	☐	☐ Move or remove partitions. ☐ Reverse the door swing if it is safe to do so. ☐ Note:
23. In the accessible stall, are there grab bars behind and on the side wall nearest to the toilet?	☐	☐	☐	☐ Add grab bars. ☐ Note:
24. Is the toilet seat 17 to 19 inches high?	☐	☐	☐	☐ Add raised seat. ☐ Note:
25. Does one lavatory have a 30-inch-wide by 48-inch-deep clear space in front? *Note: A maximum of 19 inches of the required depth may be under the lavatory.*	☐	☐	☐	☐ Rearrange furnishings. ☐ Replace lavatory. ☐ Remove or alter cabinetry to provide space underneath. Make sure hot pipes are covered. ☐ Move a partition or wall. ☐ Note:
26. Is the lavatory rim no higher than 34 inches?	☐	☐	☐	☐ Adjust or replace lavatory. ☐ Note:
27. Is there at least 29 inches from the floor to the bottom of the lavatory apron? (Excluding pipes)?	☐	☐	☐	☐ Adjust or replace lavatory. ☐ Note:
28. Can the faucet be operated with one closed fist?	☐	☐	☐	☐ Replace faucet handles with paddle type. ☐ Note:
29. Are soap and other dispensers and hand dryers within reach ranges (see page 7) and usable with one closed fist?	☐	☐	☐	☐ Lower dispensers. ☐ Replace with or provide additional accessible dispensers. ☐ Note:
30. Is the mirror mounted with the bottom edge of the reflecting surface 40 inches high or lower?	☐	☐	☐	☐ Lower or tilt down the mirror. ☐ Add a larger mirror anywhere in the room. ☐ Note:
Pit Toilets	**n/a**	**Yes**	**No**	**Pit Toilets**

31.				
☒ Check here if section does not apply to this park and move to next section.				
32. Is there a clear space of 60 inches by 60 inches adjacent to the toilet?	☐	☐	☐	☐ Repair as needed ☐ Note:
33. Does the height of the pit toilet riser comply with ADAAG 4.16.3?	☐	☐	☐	☐ Repair as needed ☐ Note:
34. Is the maneuvering space less than or equal to 1:50? (1:33 maximum allowed for drainage)	☐	☐	☐	☐ Repair as needed ☐ Note:
35. If the pit toilet has walls, are grab bars installed consistent with ADAAG 4.16.4?	☐	☐	☐	☐ Repair as needed ☐ Note:
36. Is the surface adjacent to the pit toilet firm and stable?	☐	☐	☐	☐ Repair as needed ☐ Note:
Utilities	**n/a**	**Yes**	**No**	**Utilities**
☒ Check here if section does not apply to this park and move to next section.				
37. Is the maneuvering space less than or equal to 1:50? (1:33 maximum allowed for drainage)	☐	☐	☐	☐ Repair as needed ☐ Note:
38. Is the surface adjacent to the utility firm and stable?	☐	☐	☐	☐ Repair as needed ☐ Note:
39. Are fixed water spouts located 28 inches minimum to 36 inches maximum above the ground or floor space?	☐	☐	☐	☐ Repair as needed ☐ Note:
40. Is the maneuvering space less than or equal to 1:50? (1:33 maximum allowed for drainage)	☐	☐	☐	☐ Repair as needed ☐ Note:
Drinking Fountains	**n/a**	**Yes**	**No**	**Drinking Fountains**
☒ Check here if section does not apply to this park and move to next section.				
41. Is there at least one fountain with clear floor space of at least 30 by 48 inches in front?	☐	☐	☐	☐ Clear more room by rearranging or removing furnishings. ☐ Note:
42. Is there one fountain with its spout no higher than 36 inches from the ground, and another with a standard height spout (or a single "hi-lo" fountain)?	☐	☐	☐	☐ Provide cup dispensers for fountains with spouts that are too high. ☐ Provide accessible water cooler. ☐ Note:
43. Are controls mounted on the front or on the side near the front edge, and operable with one closed fist?	☐	☐	☐	☐ Replace the controls. ☐ Note:
44. Is each water fountain cane-detectable (located within 27 inches off the floor or protruding less than 4 inches from the wall, into the circulation path?	☐	☐	☐	☐ Place a planter or other cane-detectable barrier on each side at floor level. ☐ Note:
Telephones	**n/a**	**Yes**	**No**	**Telephones**
☒ Check here if section does not apply to this park and move to next section.				
45. If pay or public use phones are provided, is there clear floor space of at least 30 by 48 inches in front of at least one?	☐	☐	☐	☐ Move furnishings. ☐ Replace booth with open station. ☐ Note:
46. Is the highest operable part of the phone no higher than 48 inches (up to 54 inches if a side approach is possible)?	☐	☐	☐	☐ Lower telephone. ☐ Note:
47. Does the phone protrude no more than 4	☐	☐	☐	☐ Place a cane-detectable barrier on each

inches into the circulation space?				side at floor level. ☐ Note:
48. Does the phone have push-button controls?	☐	☐	☐	☐ Contact phone company to install push-buttons. ☐ Note:
49. Is the phone hearing-aid compatible?	☐	☐	☐	☐ Contact phone company to replace with hearing-aid compatible phone. ☐ Note:
50. Is the phone adapted with volume control?	☐	☐	☐	☐ Contact the phone company to add volume control. ☐ Note:
51. Is the phone with volume control identified with appropriate signage?	☐	☐	☐	☐ Add signage. ☐ Note:
52. If there are four or more public phones in the building, is one of the phones equipped with a text telephone (TT or TDD)?	☐	☐	☐	☐ Install a text telephone. ☐ Have a portable text telephone available. ☐ Provide a shelf and outlet next to phone. ☐ Note:
53. Is the location of the text telephone identified by accessible signage bearing the International TDD Symbol?	☐	☐	☐	☐ Add signage. ☐ Note:

Directional and Informational Signage	**n/a**	**Yes**	**No**	**Directional and Informational Signage**
☐ Check here if section does not apply to this park and move to next section.				
54. If mounted about 80 inches, do they have letters at least 3 inches high, with high contrast, and non-glare finish?	☐	☐	☒	☒ Review requirements and replace signs as needed, meeting the requirements for character size, contrast, and finish. ☐ Note:
55. Do directional and informational signs comply with legibility requirements? 56. (Building directories or temporary signs need not comply.)	☐	☐	☒	☒ Review requirements and replace signs as needed, meeting the requirements for character size, contrast, and finish. ☐ Note:

Seats, Tables and Counters	**n/a**	**Yes**	**No**	**Seats, Tables and Counters**
☒ Check here if section does not apply to this park and move to next section.				
50. Are the spaces for wheelchair seating distributed throughout? (Cover or uncovered gathering areas, bleachers)	☐	☐	☐	☐ Rearrange tables to allow room for wheelchairs in seating areas throughout the area. ☐ Remove some fixed seating. ☐ Note:
51. If picnic tables are provided, are at least 50% and no less than two of the tables, accessible?	☐	☐	☐	☐ Replace as needed ☐ Note:
52. Are knee spaces at accessible picnic tables at least 27 inches high, 30 inches wide, and 19 inches deep?	☐	☐	☐	☐ Replace or raise tables. ☐ Note:
53. Are picnic tables spaced such that all areas of the table are accessible?	☐	☐	☐	☐ Rearrange tables to allow room for wheelchairs in seating areas throughout the area. ☐ Remove some fixed seating. ☐ Note:
54. At each type of cashier counter, is there a portion of the main counter that is no more than 36 inches high?	☐	☐	☐	☐ Provide a lower auxiliary counter or folding shelf. ☐ Arrange the counter and surrounding

				furnishings to create a space to hand items back and forth. ☐ Note:
55. Is there a portion of food-ordering counters that is no more than 36 inches high, or is there space at the side for passing items to customers who have difficulty reaching over a high counter?	☐	☐	☐	☐ Lower section of counter. ☐ Arrange the counter and surrounding furnishings to create a space to pass items. ☐ Note:
Fire Rings	**n/a**	**Yes**	**No**	**Fire Rings**
☒ Check here if section does not apply to this park and move to next section.				
56. Do all fire rings have a clear space extending a minimum 48" deep by 48" wide at all usable portions of the ring?	☐	☐	☐	☐ Install clear spaces as needed ☐ Note:
57. Are the clear spaces around the fire pit on a firm and stable surface?	☐	☐	☐	☐ Correct as needed ☐ Note:
58. Is the fire surface height a minimum of 9" above the ground/floor?	☐	☐	☐	☐ Construct or renovate pits to meet clearances ☐ Note:
59. Are the slopes around fire pits not more than 1:50?	☐	☐	☐	☐ Construct or renovate pits to meet clearances ☐ Note:
Cooking Surfaces, Grills, Pedestal Grills[2]	**n/a**	**Yes**	**No**	**Cooking Surfaces, Grills, Pedestal Grills**
☒ Check here if section does not apply to this park and move to next section.				
60. Are accessible cooking features dispersed throughout the area and among the types provided?	☐	☐	☐	☐ Evenly disperse cooking features ☐ Note:
61. Are accessible cooking feature surfaces installed between 15 inches and 34 inches above the ground/floor?	☐	☐	☐	☐ Install as required ☐ Note:
62. Do operating controls and mechanisms comply with current ADAAG 4.27.1 (General) 4.27.2 (Clear Floor Space and 4.27.3 (Height)?	☐	☐	☐	☐ Install as required ☐ Note:
Fixed Trash/Recycling Containers	**n/a**	**Yes**	**No**	**Fixed Trash/Recycling Containers**
☒ Check here if section does not apply to this park and move to next section.				
63. Are trash and recycling containers accessible and do they comply with ADAAG 4.27?	☐	☐	☐	☐ Replace as needed ☐ Note:
Overlooks/Viewing Areas	**n/a**	**Yes**	**No**	**Overlooks/Viewing Areas**
☒ Check here if section does not apply to this park and move to next section.				
64. Are all viewing areas on an accessible route?	☐	☐	☐	☐ Install accessible paths as needed ☐ Note:
65. Are all viewing areas constructed to provide an unobstructed view?	☐	☐	☐	☐ Repair as needed ☐ Note:
66. Is there at least one maneuvering space that complies with ADAAG 4.2.3?	☐	☐	☐	☐ Repair as needed ☐ Note:
67. Is the ground surface firm and stable?	☐	☐	☐	☐ Repair as needed

[2] Where there is only one cooking surface, grill or pedestal grill in a provided picnic area, it shall be accessible. Where multiple cooking features are provided in a picnic area, 50 percent, but no less than 2 shall be accessible.

				☐ Note:
68. Is the maneuvering space less than or equal to 1:50? (1:33 maximum allowed for drainage)	☐	☐	☐	☐ Repair as needed ☐ Note:
Telescopes/Periscopes	**n/a**	**Yes**	**No**	**Telescopes/Periscopes**
☒ Check here if section does not apply to this park and move to next section.				
69. Are at least 20%, but not less than one, telescope or periscope that complies with ADAAG 4.27?	☐	☐	☐	☐ Repair as needed ☐ Note:
70. Are the eye pieces usable from a seated position?	☐	☐	☐	☐ Repair as needed ☐ Note:
71. Is the ground surface firm and stable?	☐	☐	☐	☐ Repair as needed ☐ Note:
72. Is the maneuvering space less than or equal to 1:50? (1:33 maximum allowed for drainage)	☐	☐	☐	☐ Repair as needed ☐ Note:
Benches	**n/a**	**Yes**	**No**	**Benches**
☒ Check here if section does not apply to this park and move to next section.				
73. Where multiple benches are provided, are at least 50% consistent with this section?	☐	☐	☐	☐ Repair as needed ☐ Note: **only 1 bench**
74. Are accessible benches dispersed evenly throughout the park?	☐	☐	☐	☐ Disperse benches evenly throughout the park ☐ Note: just at play area
75. Of the accessible benches that are provided, do at least 50% of those benches have armrests consistent with ADAAG 4.26.3?	☐	☐	☐	☐ Repair as needed ☐ Note:
76. Are the front edges of accessible benches between 17 and 19 inches maximum above the ground/floor?	☐	☐	☐	☐ Repair as needed ☐ Note:
77. Are floor spaces adjacent to benches consistent with ADAAG 4.2.4?	☐	☐	☐	☐ Repair as needed ☐ Note:
78. Is the ground/floor surface around the accessible benches firm and stable?	☐	☐	☐	☐ Repair as needed ☐ Note:
79. Do all accessible benches have back support the full length of the bench?	☐	☐	☐	☐ Repair as needed ☐ Note:
Playground Equipment Accessibility	**n/a**	**Yes**	**No**	**Playground Equipment Accessibility**
☒ Check here if section does not apply to this park and move to next section.				
80. Is there at least one of each play component on an accessible route[3]?	☐	☐	☐	☐ Expand existing accessible routes as needed ☐ Construct accessible routes ☐ Note: bark surface
81. Is there at least one of each ground-level play component on an accessible route?	☐	☐	☐	☐ Expand existing accessible routes as needed ☐ Construct accessible routes ☐ Note:
82. Are the play components integrated for use by all children; including those with	☐	☐	☐	☐ Ensure play components on accessible routes can be used by all children

[3] Different types of play components are based on the general experience provided by the play component. Different types include, but are no limited to, rocking, swinging, climbing, spinning and sliding. Components may be elevated or at or below ground level.

disabilities?				☐ Note:
Trails	**n/a**	**Yes**	**No**	**Trails**
☐ Check here if section does not apply to this park and move to next section.				
83. Is the clear width of the trail 36 inches?	☐	☐	☒	☐ Renovate as required ☐ Construct all new trails to code ☐ Note: **narrow gate entry**
84. Are openings in the trail less than ½ inch? *Note: (Board slat spaces, etc. – Elongated openings should be placed so that the long dimension is perpendicular or diagonal to the dominate direction of travel.)*	☐	☐	☒	☐ Renovate as required ☐ Construct all new trails to code ☐ Note: **Non-ADA bark path**
85. Is the trail free of constructed or natural barriers?	☐	☐	☒	☐ Remove as needed ☐ Note:
86. Are all overhead hazards maintained at a height that is sufficient for all expected users of the trail? (Remember, Objects that protrude into a pathway at a height greater than 27" are difficult for the blind or persons with visual disabilities who use canes to detect.)	☐	☒	☐	☐ Renovate as required ☐ Construct all new trails to code ☐ Note:
87. Is there a segment in the trail that has a 10% grade for more than 30 feet?	☐	☐	☒	☐ Construct level rest interval[4] ☐ Note:
88. Are all cross slopes a maximum of 3%?	☐	☐	☒	☐ Renovate as required ☐ Construct all new trails to code ☐ Note:
89. Are all tread obstacles a maximum of 1"?	☐	☐	☐	☐ Renovate as required ☐ Construct all new trails to code ☐ Note: **Uneven bark mulch path**
90. Are passing spaces (6" x 60") provided at maximum intervals of 200 ft. whenever the clear tread width is less then 60"?	☒	☐	☐	☐ Renovate as required ☐ Construct all new trails to code ☐ Note:
91. Does the trail have or require edge protection?	☐	☐	☒	☐ Renovate as required – Where provided, edge protection should be a minimum of 3". ☐ Construct all new trails to code ☐ Note:
92. Does the trail have signs that clearly indicate the type of use, rules and difficult conditions for the trail?	☐	☐	☒	☐ Renovate as required ☐ Construct all new trails to code ☐ Note:
93. Are there signs that warn users that changes in trail level or tread obstacles could not be removed?	☐	☐	☒	☐ Renovate as required ☐ Construct all new trails to code ☐ Note:
94. Are there detectable warnings anywhere a route crosses a traffic way?	☐	☐	☒	☐ Repair as needed ☐ Note:
Shooting Facilities	**n/a**	**Yes**	**No**	**Shooting Facilities**
☒ Check here if section does not apply to this park and move to next section.				
95. Does the English Pit range have 60-inch diameter space with slopes not steeper than 1:48 so a wheelchair can turn	☐	☐	☐	☐ Renovate as needed ☐ Install accessible seating area ☐ Note

[4] Resting intervals must be 60" minimum on length and at least as wide as the widest portion of the trail segment leading to the resting interval with a cross slope that does not exceed 3%.

around?				
96. Do the firing benches have a wheelchair accessible area with a bench between 27 and 34 inches with a minimum of 19" leg space?	☐	☐	☐	☐ Renovate as needed ☐ Install accessible seating area ☐ Note
97. If fixed firing positions are provided, at least 5% but not less than one of each type of firing position, must be served by an accessible route. Does English Pit have an accessible route?	☐	☐	☐	☐ Renovate as needed ☐ Install accessible route ☐ Note
98. Does the park have accessible routes to all target impact areas?	☐	☐	☐	☐ Expand existing accessible routes as needed ☐ Construct accessible routes ☐ Note:
Aquatic Recreation Facilities	**n/a**	**Yes**	**No**	**Aquatic Recreation Facilities**
☒ Check here if section does not apply to this park and move to next section.				
99. Is there an accessible route (36" wide) over beach areas that allow access to the water's edge?	☐	☐	☐	☐ Renovate as needed ☐ Install accessible route ☐ Note
100. Are there accessible routes with handrails that lead into designated swim areas such as ponds, lakes, etc.	☐	☐	☐	☐ Renovate as needed ☐ Install accessible route ☐ Note
Fishing piers and Platforms	**n/a**	**Yes**	**No**	**Fishing piers and Platforms**
☒ Check here if section does not apply to this park and move to next section.				
101. Does this park have a facility specifically designed and constructed for fishing?	☐	☐	☐	(Structures that were not built specifically for fishing do not need to meet ADAAG guidelines. Structures designed as fishing piers or platforms, must have an accessible route.)
102. Does the park have a gangway serving the fishing pier or platform?	☐	☐	☐	☐ Install a gangway platform – Gangway 1:12 maximum slope or at least 30 feet long. ☐ Renovate existing platform to meet code (Check specific building codes) ☐ Note
103. Does the gangway have a transition plate to the pier or platform that meets code?	☐	☐	☐	☐ Install a transition plate[5] ☐ Adjust existing transition plate to meet code ☐ Note
104. Does the gangway have handrails?	☐	☐	☐	☐ Install handrail to meet code ☐ Ensure existing rails meet code ☐ Note
105. Does the fishing pier or platform have railings, guards or handrails[6]?	☐	☐	☐	☐ Install as needed ☐ Renovate existing structure to meet code ☐ Note
106. Does the fishing pier or platform have edge protection[i]?	☐	☐	☐	☐ Install ☐ Renovate existing edge protection

[5] Gangways are not required to have to have landings at the end, if transition plates are provided. If the slope of the transition plate is greater that 1: 20 (5%), the transition plates must have a landing at the end of the transition plate not connected to the gangway and must comply with other ramp requirements.

[6] Where railings, guards or handrails are provided on a fishing pier or platform, at least 25 % of the rails must be 34 inches or less in height above the ground or dock so accommodate a person in a wheelchair. These railings must be dispersed as equally as possible to all areas of the fishing pier.

				☐ Note
107. Does the fishing pier or platform have clear floor or ground space[ii]?	☐	☐	☐	☐ Install ☐ Renovate existing edge protection ☐ Note
108. Does the fishing pier or platform have sufficient turning space[iii]?	☐	☐	☐	☐ Install ☐ Renovate existing edge protection ☐ Note
Boating Facilities	**n/a**	**Yes**	**No**	**Boating Facilities**
☒ Check here if section does not apply to this park and move to next section.				
109. Is there an accessible route to the boating facilities?	☐	☐	☐	☐ Install ☐ Renovate existing route ☐ Note
110. Does the gangway to the dock or floating dock deigned to provide for a maximum 1:12 (8.33%) slope ? *Note: Not required to be longer than 80 feet. (Elevators may be used in lieu of gangways) In smaller facilities with less than 25 boat slips, the slope of the gangway may exceed 1:12, if the gangway is at least 30 feet long.*	☐	☐	☐	☐ Install ☐ Renovate existing route ☐ Note
111. Does the gangway have a transition plate to the pier or platform that meets code[iv]?	☐	☐	☐	☐ Install a transition plate ☐ Adjust existing transition plate to meet code ☐ Note

<table>
<tr>
<td>112. Where boat slips[7] are provided, does the number of accessible slips[8] comply with the table to the right?
Note: If boat slips at a facility are not identified or demarcated by length, each 40 feet of boat slip edge along the perimeter of a pier will be counted as one boat slip</td>
<td>☐</td>
<td>☐</td>
<td>☐</td>
<td>
<table>
<tr><th colspan="2">Number of Accessible Boat Slips Required</th></tr>
<tr><td>Total Slips in Facility</td><td>Minimum Accessible Slips</td></tr>
<tr><td>1-25</td><td>1</td></tr>
<tr><td>26-50</td><td>2</td></tr>
<tr><td>50-100</td><td>3</td></tr>
<tr><td>101-150</td><td>4</td></tr>
</table>
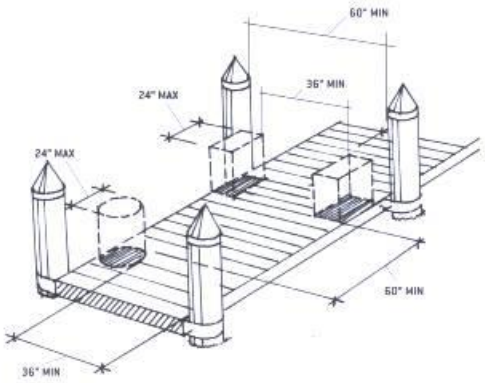

PIER CLEARANCE SPACE REDUCTION
</td>
</tr>
<tr>
<td>If the facility only has a boarding pier (see footnote # 9) at least 5% but not less than, must comply with these guidelines. The entire length of accessible boarding piers must comply with the same provisions that apply to slips.

113. Does this facility meet this regulation?</td>
<td>☐</td>
<td>☐</td>
<td>☐</td>
<td>☐ Install
☐ Renovate boarding pier
☐ Note</td>
</tr>
<tr>
<td>114. Is this facility compromised only of a boat launch with no boarding ramp or pier?</td>
<td>☐</td>
<td>☐</td>
<td>☐</td>
<td>If yes, there are no specific provisions that address access to launch ramps without boarding piers.</td>
</tr>
</table>

[7] A boat slip is the portion of a pier, main pier, finger pier, or float where a boat is berthed or moored, or used for embarking or disembarking. Boarding piers that are not part of a boat launch ramp are classified as “boat slips” for the purpose of this survey.

[8] Accessible boat slips must have clear pier space at least 60 inches wide and as long as the slip. Every 10 feet of linear pier edge serving the accessible slips must have at least one continuous clear opening that is at least 60 inches wide. The width of the clear pier space may be 36 inches wide for a length of 24 inches, as long as multiple 36-inch segments are separated by segments that are 60 inches minimum clear in width and 60 inches minimum clear in length, and the clear openings are at least 60 inches deep. Edge protection is not required

Item Number	Notes
	Signs at entry gate prohibit public access during school hours.

4.2.3* Wheelchair Turning Space. The space required for a wheelchair to make a 180-degree turn is a clear space of 60 in (1525 mm) diameter (see Fig. 3(a)) or a T-shaped space (see Fig. 3(b)). Appendix Note

4.2.4* Clear Floor or Ground Space for Wheelchairs.

4.2.4.1 Size and Approach. The minimum clear floor or ground space required to accommodate a single, stationary wheelchair and occupant is 30 in by 48 in (760 mm by 1220 mm) (see Fig. 4(a)). The minimum clear floor or ground space for wheelchairs may be positioned for forward or parallel approach to an object (see Fig. 4(b) and (c)). Clear floor or ground space for wheelchairs may be part of the knee space required under some objects.

4.2.4.2 Relationship of Maneuvering Clearance to Wheelchair Spaces. One full unobstructed side of the clear floor or ground space for a wheelchair shall adjoin or overlap an accessible route or adjoin another wheelchair clear floor space. If a clear floor space is located in an alcove or otherwise confined on all or part of three sides, additional maneuvering clearances shall be provided as shown in Fig. 4(d) and (e).

4.2.4.3 Surfaces for Wheelchair Spaces. Clear floor or ground spaces for wheelchairs shall comply with 4.5. Appendix Note

4.16.3* Height. The height of water closets shall be 17 in to 19 in (430 mm to 485 mm), measured to the top of the toilet seat (see Fig. 29(b)). Seats shall not be sprung to return to a lifted position. Appendix Note

4.16.4* Grab Bars. Grab bars for water closets not located in stalls shall comply with 4.26 and Fig. 29. The grab bar behind the water closet shall be 36 in (915 mm) minimum. Appendix Note

4.26.3 Structural Strength. The structural strength of grab bars, tub and shower seats, fasteners, and mounting devices shall meet the following specification:

(1) Bending stress in a grab bar or seat induced by the maximum bending moment from the application of 250 lbf (1112N) shall be less than the allowable stress for the material of the grab bar or seat.

(2) Shear stress induced in a grab bar or seat by the application of 250 lbf (1112N) shall be less than the allowable shear stress for the material of the grab bar or seat. If the connection between the grab bar or seat and its mounting bracket or other support is considered to be fully restrained, then direct and torsional shear stresses shall be totaled for the combined shear stress, which shall not exceed the allowable shear stress.

(3) Shear force induced in a fastener or mounting device from the application of 250 lbf (1112N) shall be less than the allowable lateral load of either the fastener or mounting device or the supporting structure, whichever is the smaller allowable load.

(4) Tensile force induced in a fastener by a direct tension force of 250 lbf (1112N) plus the maximum moment from the application of 250 lbf (1112N) shall be less than the allowable withdrawal load between the fastener and the supporting structure.

(5) Grab bars shall not rotate within their fittings.

4.27 Controls and Operating Mechanisms.

4.27.1 General. Controls and operating mechanisms required to be accessible by 4.1 shall comply with 4.27.

4.27.2 Clear Floor Space. Clear floor space complying with 4.2.4 that allows a forward or a parallel approach by a person using a wheelchair shall be provided at controls, dispensers, receptacles, and other operable equipment.

4.27.3* Height. The highest operable part of controls, dispensers, receptacles, and other operable equipment shall be placed within at least one of the reach ranges specified in 4.2.5 and 4.2.6. Electrical and communications system receptacles on walls shall be mounted no less than 15 in (380 mm) above the floor. Appendix Note

EXCEPTION: These requirements do not apply where the use of special equipment dictates otherwise or where electrical and communications systems receptacles are not normally intended for use by building occupants.

4.27.4 Operation. Controls and operating mechanisms shall be operable with one hand and shall not require tight grasping, pinching, or twisting of the wrist. The force required to activate controls shall be no greater than 5 lbf (22.2 N).

---

[i] Where railings, guards or handrails are provided, edge protection must be provided and extended a minimum of 2 inches above the ground or deck surface. Edge protection is not required where a railing, guardrail or handrail is provided, if the deck surface extends a minimum of 12 inches beyond the inside face of the railing.

[ii] At least one clear floor or ground space (30 inches by 48 inches) must be provided at each location that has a railing height of 34 inches maximum. If there is no railing, at least one clear space must be provided on a pier or platform.

[iii] Fishing piers and platforms must have at least one turning area, either 60-inch turning space or a T-shaped space to allow a person using a mobility device or wheelchair to make a 180-degree turn.

[iv] Gangways are not required to have to have landings at the end, if transition plates are provided. If the slope of the transition plate is greater that 1: 20 (5%), the transition plates must have a landing at the end of the transition plate not connected to the gangway and must comply with other ramp requirements.

ADA Compliance Program

MEDFORD PARKS AND RECREATION DEPARTMENT

ADA ACCESSIBILITY SURVEY FOR PARK FACILITIES

Date: **March 2, 2016** **Estimated Cost:**

Facility: **Oregon Hills Park** **Department Notified:**

Survey by: **Jean Akers** **Date of Notification:**

Check all applicable building codes and ADAAG publications prior to any renovation or construction. This survey is only a guideline.

ITEM				RECOMMENDATIONS
Accessible Routes[1]	**n/a**	**Yes**	**No**	**Accessible Routes**
☐ Check here if section does not apply to this park and move to next section.				
1. Does the park have accessible routes to all accessible facilities within the park?	☐	☐	☒	☐ Expand existing accessible routes as needed ☒ Construct accessible routes ☐ Note: **Bear/log play area – no access**
2. Where court sports are provided (i.e. tennis, basketball, and volleyball) are there accessible routes to each court? (Routes must connect both sides of the court)	☐	☒	☐	☐ Expand existing accessible routes as needed ☐ Construct accessible routes ☐ Note:
3. Are there accessible routes to any and all animal containment areas?	☒	☐	☐	☐ Expand existing accessible routes as needed ☐ Construct accessible routes ☐ Note:
4. Are there detectable warnings anywhere a route crosses a traffic way?	☐	☒	☐	☐ Repair as needed ☐ Note:
ITEM				**RECOMMENDATIONS**
Parking and Drop-off Areas	**n/a**	**Yes**	**No**	**Parking and Drop-off Areas**
☐ Check here if section does not apply to this park and move to next section.				
5. Are an adequate number of accessible parking spaces available? The table below gives the ADAAG requirement for new construction and alterations (for lots with more than 100 spaces refer to ADAAG). Accessible Spaces per Overall spaces Total Spaces — Accessible Spaces Required 1 to 25 — 1 space 26 to 50 — 2 spaces 51 to 75 — 3 spaces 76 to 100 — 4 spaces	☐	☒	☐	☐ Reconfigure a reasonable number of spaces by repainting stripes. ☐ Construct accessible routes ☒ Note: **Slope in access aisle = 3.3%, exceeding 1:48 maximum.**

[1] Accessible routes must comply with ADAAG provisions for the location, width (minimum 36 inches) passing space, head room, surface, slope (Maximum 1:12 (or 8.33%). Accessible routes must connect all accessible elements within the facility. Accessible routes must be stable, firm and slip resistant. There is no requirement to change the surface of a playing field to an accessible surface.

6. Are an adequate number of van accessible spaces provided? At least 1 of every 8 accessible spaces must be van-accessible (with a minimum of 1 van-accessible space in all cases.)	☐	☒	☐	☐ Reconfigure to provide van-accessible space(s).
7. Are the access aisles part of the accessible route?	☐	☒	☐	☐ Add curb ramps. ☐ Reconstruct sidewalk
8. Are the accessible spaces closest to the accessible entrance?	☐	☒	☐	☐ Reconfigure spaces.
9. Are accessible spaces marked with and International Symbol of Accessibility? Are there signs reading "Van Accessible" at van spaces?	☐	☒	☐	☐ Add signs, placed so that they are not obstructed by cars.
10. Is there an enforcement procedure to ensure that accessible parking is used only by those who need it?	☒	☐	☐	☐ Implement a policy to check periodically for violators and report them to the proper authorities.
Team Player Seating Areas	**n/a**	**Yes**	**No**	**Team Player Seating Areas**
☒ Check here if section does not apply to this park and move to next section.				
11. Do fixed team or player seating areas contain the required number of wheelchair spaces and companion seats required by ADAAG?	☐	☐	☐	☐ Renovate as needed ☐ Install accessible seating area ☐ Note
Restrooms	**n/a**	**Yes**	**No**	**Restrooms**
☐ Check here if section does not apply to this park and move to next section.				
12. If rest rooms are available to the public, is at least one rest room (either one for each sex, or unisex) fully accessible?	☐	☒	☐	☐ Reconfigure rest room. ☐ Combine rest rooms to create one unisex accessible rest room. ☐ Note:
13. Are there signs at inaccessible rest rooms that give directions to accessible ones?	☒	☐	☐	☐ Install accessible signs. ☐ Note:
14. Is there tactile signage identifying rest rooms? *Note: Mount signs on the wall, on the latch side of the door, complying with the permanent signage.*	☐	☒	☐	☐ Add accessible signage, placed to the side of the door, 60 inches to centerline (not on the door itself). ☐ If symbols are used, add supplementary verbal signage. ☐ Note:
15. Are pictograms or symbols used to identify rest rooms, and, if used, are raised characters and braille included below?	☐	☒	☐	☐ If symbols are used, add supplementary verbal signage with raised characters and braille below pictogram symbol. ☐ Note:
16. Is the doorway at least 32 inches clear?	☐	☒	☐	☐ Install offset (swing-clear) hinges. ☐ Widen the doorway. ☐ Note:
17. Are doors equipped with accessible handles (operable with a closed fist), 48 inches high or less?	☐	☒	☐	☐ Lower handles. ☐ Replace knobs or latches with lever or loop handles. ☐ Add lever extensions. ☐ Install power-assisted or automatic door openers. ☐ Note:

18. Can doors be opened easily (5 lbf maximum force)?	☐	☒	☐	☐ Adjust or replace closers. ☐ Install lighter doors. ☐ Install power-assisted or automatic door openers. ☐ Note:
19. Does the entry configuration provide adequate maneuvering space for a person using a wheelchair? *Note: A person using a wheelchair needs 36 inches of clear width for forward movement, and a 5-foot diameter clear space or a T-shaped space to make turns. A minimum distance of 48 inches clear of the door swing is needed between the two doors of an entry vestibule.*	☐	☒	☐	☐ Rearrange furnishings such as chairs and trash cans. ☐ Remove inner door if there is a vestibule with two doors. ☐ Move or remove obstructing partitions. ☐ Note:
20. Is there a 36-inch-wide path to all fixtures?	☐	☒	☐	☐ Remove obstructions. ☐ Note:
21. Is the stall door operable with a closed fist, inside and out?	☐	☐	☐	☐ Replace inaccessible knobs with lever or loop handles. ☐ Add lever extensions. ☐ Note:
22. Is there a wheelchair-accessible stall that has an area of at least 5 feet by 5 feet, clear of the door swing, OR is there a stall that is less accessible but that provides greater access than a typical stall (either 36 by 69 inches or 48 by 69 inches)?	☐	☐	☐	☐ Move or remove partitions. ☐ Reverse the door swing if it is safe to do so. ☐ Note:
23. In the accessible stall, are there grab bars behind and on the side wall nearest to the toilet?	☐	☐	☐	☐ Add grab bars. ☐ Note:
24. Is the toilet seat 17 to 19 inches high?	☐	☐	☐	☐ Add raised seat. ☐ Note:
25. Does one lavatory have a 30-inch-wide by 48-inch-deep clear space in front? *Note: A maximum of 19 inches of the required depth may be under the lavatory.*	☐	☐	☐	☐ Rearrange furnishings. ☐ Replace lavatory. ☐ Remove or alter cabinetry to provide space underneath. Make sure hot pipes are covered. ☐ Move a partition or wall. ☐ Note:
26. Is the lavatory rim no higher than 34 inches?	☐	☐	☐	☐ Adjust or replace lavatory. ☐ Note:
27. Is there at least 29 inches from the floor to the bottom of the lavatory apron? (Excluding pipes)?	☐	☐	☐	☐ Adjust or replace lavatory. ☐ Note:
28. Can the faucet be operated with one closed fist?	☐	☐	☐	☐ Replace faucet handles with paddle type. ☐ Note:
29. Are soap and other dispensers and hand dryers within reach ranges (see page 7) and usable with one closed fist?	☐	☐	☐	☐ Lower dispensers. ☐ Replace with or provide additional accessible dispensers. ☐ Note:
30. Is the mirror mounted with the bottom edge of the reflecting surface 40 inches high or lower?	☐	☐	☐	☐ Lower or tilt down the mirror. ☐ Add a larger mirror anywhere in the room. ☐ Note:
Pit Toilets	**n/a**	**Yes**	**No**	**Pit Toilets**
31.				

☒ Check here if section does not apply to this park and move to next section.				
32. Is there a clear space of 60 inches by 60 inches adjacent to the toilet?	☐	☐	☐	☐ Repair as needed ☐ Note:
33. Does the height of the pit toilet riser comply with ADAAG 4.16.3?	☐	☐	☐	☐ Repair as needed ☐ Note:
34. Is the maneuvering space less than or equal to 1:50? (1:33 maximum allowed for drainage)	☐	☐	☐	☐ Repair as needed ☐ Note:
35. If the pit toilet has walls, are grab bars installed consistent with ADAAG 4.16.4?	☐	☐	☐	☐ Repair as needed ☐ Note:
36. Is the surface adjacent to the pit toilet firm and stable?	☐	☐	☐	☐ Repair as needed ☐ Note:
Utilities	**n/a**	**Yes**	**No**	**Utilities**
☒ Check here if section does not apply to this park and move to next section.				
37. Is the maneuvering space less than or equal to 1:50? (1:33 maximum allowed for drainage)	☐	☐	☐	☐ Repair as needed ☐ Note:
38. Is the surface adjacent to the utility firm and stable?	☐	☐	☐	☐ Repair as needed ☐ Note:
39. Are fixed water spouts located 28 inches minimum to 36 inches maximum above the ground or floor space?	☐	☐	☐	☐ Repair as needed ☐ Note:
40. Is the maneuvering space less than or equal to 1:50? (1:33 maximum allowed for drainage)	☐	☐	☐	☐ Repair as needed ☐ Note:
Drinking Fountains	**n/a**	**Yes**	**No**	**Drinking Fountains**
☐ Check here if section does not apply to this park and move to next section.				
41. Is there at least one fountain with clear floor space of at least 30 by 48 inches in front?	☐	☒	☐	☐ Clear more room by rearranging or removing furnishings. ☐ Note:
42. Is there one fountain with its spout no higher than 36 inches from the ground, and another with a standard height spout (or a single "hi-lo" fountain)?	☐	☐	☒	☐ Provide cup dispensers for fountains with spouts that are too high. ☐ Provide accessible water cooler. ☒ Note: **One inch too high**
43. Are controls mounted on the front or on the side near the front edge, and operable with one closed fist?	☐	☒	☐	☐ Replace the controls. ☐ Note:
44. Is each water fountain cane-detectable (located within 27 inches off the floor or protruding less than 4 inches from the wall, into the circulation path?	☐	☐	☒	☐ Place a planter or other cane-detectable barrier on each side at floor level. ☒ Note**: Bench next to fountain; 28" off floor**
Telephones	**n/a**	**Yes**	**No**	**Telephones**
☒ Check here if section does not apply to this park and move to next section.				
45. If pay or public use phones are provided, is there clear floor space of at least 30 by 48 inches in front of at least one?	☐	☐	☐	☐ Move furnishings. ☐ Replace booth with open station. ☐ Note:
46. Is the highest operable part of the phone no higher than 48 inches (up to 54 inches if a side approach is possible)?	☐	☐	☐	☐ Lower telephone. ☐ Note:
47. Does the phone protrude no more than 4 inches into the circulation space?	☐	☐	☐	☐ Place a cane-detectable barrier on each side at floor level. ☐ Note:

48. Does the phone have push-button controls?	☐	☐	☐	☐ Contact phone company to install push-buttons. ☐ Note:
49. Is the phone hearing-aid compatible?	☐	☐	☐	☐ Contact phone company to replace with hearing-aid compatible phone. ☐ Note:
50. Is the phone adapted with volume control?	☐	☐	☐	☐ Contact the phone company to add volume control. ☐ Note:
51. Is the phone with volume control identified with appropriate signage?	☐	☐	☐	☐ Add signage. ☐ Note:
52. If there are four or more public phones in the building, is one of the phones equipped with a text telephone (TT or TDD)?	☐	☐	☐	☐ Install a text telephone. ☐ Have a portable text telephone available. ☐ Provide a shelf and outlet next to phone. ☐ Note:
53. Is the location of the text telephone identified by accessible signage bearing the International TDD Symbol?	☐	☐	☐	☐ Add signage. ☐ Note:

Directional and Informational Signage	**n/a**	**Yes**	**No**	**Directional and Informational Signage**
☐ Check here if section does not apply to this park and move to next section.				
54. If mounted about 80 inches, do they have letters at least 3 inches high, with high contrast, and non-glare finish?	☐	☐	☒	☐ Review requirements and replace signs as needed, meeting the requirements for character size, contrast, and finish. ☒ Note: Rules sign
55. Do directional and informational signs comply with legibility requirements? 56. (Building directories or temporary signs need not comply.)	☐	☐	☒	☒ Review requirements and replace signs as needed, meeting the requirements for character size, contrast, and finish. ☐ Note:

Seats, Tables and Counters	**n/a**	**Yes**	**No**	**Seats, Tables and Counters**
☐ Check here if section does not apply to this park and move to next section.				
50. Are the spaces for wheelchair seating distributed throughout? (Cover or uncovered gathering areas, bleachers)	☐	☐	☒	☐ Rearrange tables to allow room for wheelchairs in seating areas throughout the area. ☒ Remove some fixed seating & replace with H/C ☒ Note: **5 tables; no W/C seating**
51. If picnic tables are provided, are at least 50% and no less than two of the tables, accessible?	☐	☐	☒	☐ Replace as needed ☐ Note:
52. Are knee spaces at accessible picnic tables at least 27 inches high, 30 inches wide, and 19 inches deep?	☐	☐	☒	☐ Replace or raise tables. ☐ Note: **No knee space on tables**
53. Are picnic tables spaced such that all areas of the table are accessible?	☐	☐	☒	☒ Rearrange tables to allow room for wheelchairs in seating areas throughout the area. ☐ Remove some fixed seating. ☐ Note:
54. At each type of cashier counter, is there a portion of the main counter that is no more than 36 inches high?	☒	☐	☐	☐ Provide a lower auxiliary counter or folding shelf. ☐ Arrange the counter and surrounding furnishings to create a space to hand

				items back and forth. ☐ Note:
55. Is there a portion of food-ordering counters that is no more than 36 inches high, or is there space at the side for passing items to customers who have difficulty reaching over a high counter?	☒	☐	☐	☐ Lower section of counter. ☐ Arrange the counter and surrounding furnishings to create a space to pass items. ☐ Note:
Fire Rings	**n/a**	**Yes**	**No**	**Fire Rings**
☒ Check here if section does not apply to this park and move to next section.				
56. Do all fire rings have a clear space extending a minimum 48" deep by 48" wide at all usable portions of the ring?	☐	☐	☐	☐ Install clear spaces as needed ☐ Note:
57. Are the clear spaces around the fire pit on a firm and stable surface?	☐	☐	☐	☐ Correct as needed ☐ Note:
58. Is the fire surface height a minimum of 9" above the ground/floor?	☐	☐	☐	☐ Construct or renovate pits to meet clearances ☐ Note:
59. Are the slopes around fire pits not more than 1:50?	☐	☐	☐	☐ Construct or renovate pits to meet clearances ☐ Note:
Cooking Surfaces, Grills, Pedestal Grills[2]	**n/a**	**Yes**	**No**	**Cooking Surfaces, Grills, Pedestal Grills**
☒ Check here if section does not apply to this park and move to next section.				
60. Are accessible cooking features dispersed throughout the area and among the types provided?	☐	☐	☐	☐ Evenly disperse cooking features ☐ Note:
61. Are accessible cooking feature surfaces installed between 15 inches and 34 inches above the ground/floor?	☐	☐	☐	☐ Install as required ☐ Note:
62. Do operating controls and mechanisms comply with current ADAAG 4.27.1 (General) 4.27.2 (Clear Floor Space and 4.27.3 (Height)?	☐	☐	☐	☐ Install as required ☐ Note:
Fixed Trash/Recycling Containers	**n/a**	**Yes**	**No**	**Fixed Trash/Recycling Containers**
☒ Check here if section does not apply to this park and move to next section.				
63. Are trash and recycling containers accessible and do they comply with ADAAG 4.27?	☐	☐	☐	☐ Replace as needed ☐ Note:
Overlooks/Viewing Areas	**n/a**	**Yes**	**No**	**Overlooks/Viewing Areas**
☐ Check here if section does not apply to this park and move to next section.				
64. Are all viewing areas on an accessible route?	☐	☒	☐	☐ Install accessible paths as needed ☐ Note:
65. Are all viewing areas constructed to provide an unobstructed view?	☐	☒	☐	☐ Repair as needed ☐ Note:
66. Is there at least one maneuvering space that complies with ADAAG 4.2.3?	☐	☒	☐	☐ Repair as needed ☐ Note:
67. Is the ground surface firm and stable?	☐	☒	☐	☐ Repair as needed ☐ Note:

[2] Where there is only one cooking surface, grill or pedestal grill in a provided picnic area, it shall be accessible. Where multiple cooking features are provided in a picnic area, 50 percent, but no less than 2 shall be accessible.

68. Is the maneuvering space less than or equal to 1:50? (1:33 maximum allowed for drainage)	☐	☒	☐	☐ Repair as needed ☐ Note:
Telescopes/Periscopes	**n/a**	**Yes**	**No**	**Telescopes/Periscopes**
☒ Check here if section does not apply to this park and move to next section.				
69. Are at least 20%, but not less than one, telescope or periscope that complies with ADAAG 4.27?	☐	☐	☐	☐ Repair as needed ☐ Note:
70. Are the eye pieces usable from a seated position?	☐	☐	☐	☐ Repair as needed ☐ Note:
71. Is the ground surface firm and stable?	☐	☐	☐	☐ Repair as needed ☐ Note:
72. Is the maneuvering space less than or equal to 1:50? (1:33 maximum allowed for drainage)	☐	☐	☐	☐ Repair as needed ☐ Note:
Benches	**n/a**	**Yes**	**No**	**Benches**
☐ Check here if section does not apply to this park and move to next section.				
73. Where multiple benches are provided, are at least 50% consistent with this section?	☐	☒	☐	☐ Repair as needed ☐ Note:
74. Are accessible benches dispersed evenly throughout the park?	☐	☒	☐	☐ Disperse benches evenly throughout the park ☐ Note: just at play area
75. Of the accessible benches that are provided, do at least 50% of those benches have armrests consistent with ADAAG 4.26.3?	☐	☐	☒	☐ Repair as needed ☐ Note: **No armrests**
76. Are the front edges of accessible benches between 17 and 19 inches maximum above the ground/floor?	☐	☒	☐	☐ Repair as needed ☐ Note:
77. Are floor spaces adjacent to benches consistent with ADAAG 4.2.4?	☐	☒	☐	☐ Repair as needed ☐ Note:
78. Is the ground/floor surface around the accessible benches firm and stable?	☐	☒	☐	☐ Repair as needed ☐ Note:
79. Do all accessible benches have back support the full length of the bench?	☐	☒	☐	☐ Repair as needed ☐ Note:
Playground Equipment Accessibility	**n/a**	**Yes**	**No**	**Playground Equipment Accessibility**
☐ Check here if section does not apply to this park and move to next section.				
80. Is there at least one of each play component on an accessible route[3]?	☐	☐	☒	☐ Expand existing accessible routes as needed ☒ Construct accessible routes ☐ Note: bark surface
81. Is there at least one of each ground-level play component on an accessible route?	☐	☐	☒	☐ Expand existing accessible routes as needed ☒ Construct accessible routes ☐ Note:
82. Are the play components integrated for use by all children; including those with disabilities?	☐	☐	☒	☒ Ensure play components on accessible routes can be used by all children ☐ Note:

[3] Different types of play components are based on the general experience provided by the play component. Different types include, but are no limited to, rocking, swinging, climbing, spinning and sliding. Components may be elevated or at or below ground level.

Trails	n/a	Yes	No	Trails
☐ Check here if section does not apply to this park and move to next section.				
83. Is the clear width of the trail 36 inches?	☐	☒	☐	☐ Renovate as required ☐ Construct all new trails to code ☐ Note:
84. Are openings in the trail less than ½ inch? *Note: (Board slat spaces, etc. – Elongated openings should be placed so that the long dimension is perpendicular or diagonal to the dominate direction of travel.)*	☐	☒	☐	☐ Renovate as required ☐ Construct all new trails to code ☐ Note:
85. Is the trail free of constructed or natural barriers?	☐	☒	☐	☐ Remove as needed ☐ Note:
86. Are all overhead hazards maintained at a height that is sufficient for all expected users of the trail? (Remember, Objects that protrude into a pathway at a height greater than 27" are difficult for the blind or persons with visual disabilities who use canes to detect.)	☐	☒	☐	☐ Renovate as required ☐ Construct all new trails to code ☐ Note:
87. Is there a segment in the trail that has a 10% grade for more than 30 feet?	☐	☐	☒	☐ Construct level rest interval[4] ☐ Note:
88. Are all cross slopes a maximum of 3%?	☐	☒	☐	☐ Renovate as required ☐ Construct all new trails to code ☐ Note:
89. Are all tread obstacles a maximum of 1"?	☐	☒	☐	☐ Renovate as required ☐ Construct all new trails to code ☐ Note:
90. Are passing spaces (6" x 60") provided at maximum intervals of 200 ft. whenever the clear tread width is less then 60"?	☐	☒	☐	☐ Renovate as required ☐ Construct all new trails to code ☐ Note:
91. Does the trail have or require edge protection?	☐	☐	☒	☐ Renovate as required – Where provided, edge protection should be a minimum of 3". ☐ Construct all new trails to code ☐ Note:
92. Does the trail have signs that clearly indicate the type of use, rules and difficult conditions for the trail?	☐	☐	☒	☐ Renovate as required ☐ Construct all new trails to code ☐ Note:
93. Are there signs that warn users that changes in trail level or tread obstacles could not be removed?	☒	☐	☐	☐ Renovate as required ☐ Construct all new trails to code ☐ Note:
94. Are there detectable warnings anywhere a route crosses a traffic way?	☐	☒	☐	☐ Repair as needed ☐ Note:
Shooting Facilities	**n/a**	**Yes**	**No**	**Shooting Facilities**
☒ Check here if section does not apply to this park and move to next section.				
95. Does the English Pit range have 60-inch diameter space with slopes not steeper than 1:48 so a wheelchair can turn around?	☐	☐	☐	☐ Renovate as needed ☐ Install accessible seating area ☐ Note

[4] Resting intervals must be 60" minimum on length and at least as wide as the widest portion of the trail segment leading to the resting interval with a cross slope that does not exceed 3%.

96. Do the firing benches have a wheelchair accessible area with a bench between 27 and 34 inches with a minimum of 19" leg space?	☐	☐	☐	☐ Renovate as needed ☐ Install accessible seating area ☐ Note
97. If fixed firing positions are provided, at least 5% but not less than one of each type of firing position, must be served by an accessible route. Does English Pit have an accessible route?	☐	☐	☐	☐ Renovate as needed ☐ Install accessible route ☐ Note
98. Does the park have accessible routes to all target impact areas?	☐	☐	☐	☐ Expand existing accessible routes as needed ☐ Construct accessible routes ☐ Note:
Aquatic Recreation Facilities	**n/a**	**Yes**	**No**	**Aquatic Recreation Facilities**
☒ Check here if section does not apply to this park and move to next section.				
99. Is there an accessible route (36" wide) over beach areas that allow access to the water's edge?	☐	☐	☐	☐ Renovate as needed ☐ Install accessible route ☐ Note
100. Are there accessible routes with handrails that lead into designated swim areas such as ponds, lakes, etc.	☐	☐	☐	☐ Renovate as needed ☐ Install accessible route ☐ Note
Fishing piers and Platforms	**n/a**	**Yes**	**No**	**Fishing piers and Platforms**
☒ Check here if section does not apply to this park and move to next section.				
101. Does this park have a facility specifically designed and constructed for fishing?	☐	☐	☐	(Structures that were not built specifically for fishing do not need to meet ADAAG guidelines. Structures designed as fishing piers or platforms, must have an accessible route.)
102. Does the park have a gangway serving the fishing pier or platform?	☐	☐	☐	☐ Install a gangway platform – Gangway 1:12 maximum slope or at least 30 feet long. ☐ Renovate existing platform to meet code (Check specific building codes) ☐ Note
103. Does the gangway have a transition plate to the pier or platform that meets code?	☐	☐	☐	☐ Install a transition plate[5] ☐ Adjust existing transition plate to meet code ☐ Note
104. Does the gangway have handrails?	☐	☐	☐	☐ Install handrail to meet code ☐ Ensure existing rails meet code ☐ Note
105. Does the fishing pier or platform have railings, guards or handrails[6]?	☐	☐	☐	☐ Install as needed ☐ Renovate existing structure to meet code ☐ Note
106. Does the fishing pier or platform have edge protection[i]?	☐	☐	☐	☐ Install ☐ Renovate existing edge protection ☐ Note

[5] Gangways are not required to have to have landings at the end, if transition plates are provided. If the slope of the transition plate is greater that 1: 20 (5%), the transition plates must have a landing at the end of the transition plate not connected to the gangway and must comply with other ramp requirements.

[6] Where railings, guards or handrails are provided on a fishing pier or platform, at least 25 % of the rails must be 34 inches or less in height above the ground or dock so accommodate a person in a wheelchair. These railings must be dispersed as equally as possible to all areas of the fishing pier.

107. Does the fishing pier or platform have clear floor or ground space[ii]?	☐	☐	☐	☐ Install ☐ Renovate existing edge protection ☐ Note
108. Does the fishing pier or platform have sufficient turning space[iii]?	☐	☐	☐	☐ Install ☐ Renovate existing edge protection ☐ Note
Boating Facilities	**n/a**	**Yes**	**No**	**Boating Facilities**
☒ Check here if section does not apply to this park and move to next section.				
109. Is there an accessible route to the boating facilities?	☐	☐	☐	☐ Install ☐ Renovate existing route ☐ Note
110. Does the gangway to the dock or floating dock deigned to provide for a maximum 1:12 (8.33%) slope ? *Note: Not required to be longer than 80 feet. (Elevators may be used in lieu of gangways) In smaller facilities with less than 25 boat slips, the slope of the gangway may exceed 1:12, if the gangway is at least 30 feet long.*	☐	☐	☐	☐ Install ☐ Renovate existing route ☐ Note
111. Does the gangway have a transition plate to the pier or platform that meets code[iv]?	☐	☐	☐	☐ Install a transition plate ☐ Adjust existing transition plate to meet code ☐ Note

<table>
<tr><td>112. Where boat slips[7] are provided, does the number of accessible slips[8] comply with the table to the right?
Note: If boat slips at a facility are not identified or demarcated by length, each 40 feet of boat slip edge along the perimeter of a pier will be counted as one boat slip</td><td>☐</td><td>☐</td><td>☐</td><td>
<table>
<tr><th colspan="2">Number of Accessible Boat Slips Required</th></tr>
<tr><td>Total Slips in Facility</td><td>Minimum Accessible Slips</td></tr>
<tr><td>1-25</td><td>1</td></tr>
<tr><td>26-50</td><td>2</td></tr>
<tr><td>50-100</td><td>3</td></tr>
<tr><td>101-150</td><td>4</td></tr>
</table>
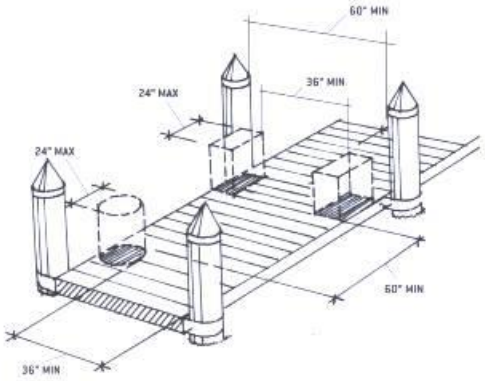

PIER CLEARANCE SPACE REDUCTION
</td></tr>
<tr><td>If the facility only has a boarding pier (see footnote # 9) at least 5% but not less than, must comply with these guidelines. The entire length of accessible boarding piers must comply with the same provisions that apply to slips.

113. Does this facility meet this regulation?</td><td>☐</td><td>☐</td><td>☐</td><td>☐ Install
☐ Renovate boarding pier
☐ Note</td></tr>
<tr><td>114. Is this facility compromised only of a boat launch with no boarding ramp or pier?</td><td>☐</td><td>☐</td><td>☐</td><td>If yes, there are no specific provisions that address access to launch ramps without boarding piers.</td></tr>
</table>

[7] A boat slip is the portion of a pier, main pier, finger pier, or float where a boat is berthed or moored, or used for embarking or disembarking. Boarding piers that are not part of a boat launch ramp are classified as “boat slips” for the purpose of this survey.

[8] Accessible boat slips must have clear pier space at least 60 inches wide and as long as the slip. Every 10 feet of linear pier edge serving the accessible slips must have at least one continuous clear opening that is at least 60 inches wide. The width of the clear pier space may be 36 inches wide for a length of 24 inches, as long as multiple 36-inch segments are separated by segments that are 60 inches minimum clear in width and 60 inches minimum clear in length, and the clear openings are at least 60 inches deep. Edge protection is not required

Item Number	Notes
	No ramp to bear/log play area
	Ramps to climbing boulder and sand play end with steep slope

4.2.3* Wheelchair Turning Space. The space required for a wheelchair to make a 180-degree turn is a clear space of 60 in (1525 mm) diameter (see Fig. 3(a)) or a T-shaped space (see Fig. 3(b)). Appendix Note

4.2.4* Clear Floor or Ground Space for Wheelchairs.

4.2.4.1 Size and Approach. The minimum clear floor or ground space required to accommodate a single, stationary wheelchair and occupant is 30 in by 48 in (760 mm by 1220 mm) (see Fig. 4(a)). The minimum clear floor or ground space for wheelchairs may be positioned for forward or parallel approach to an object (see Fig. 4(b) and (c)). Clear floor or ground space for wheelchairs may be part of the knee space required under some objects.

4.2.4.2 Relationship of Maneuvering Clearance to Wheelchair Spaces. One full unobstructed side of the clear floor or ground space for a wheelchair shall adjoin or overlap an accessible route or adjoin another wheelchair clear floor space. If a clear floor space is located in an alcove or otherwise confined on all or part of three sides, additional maneuvering clearances shall be provided as shown in Fig. 4(d) and (e).

4.2.4.3 Surfaces for Wheelchair Spaces. Clear floor or ground spaces for wheelchairs shall comply with 4.5. Appendix Note

4.16.3* Height. The height of water closets shall be 17 in to 19 in (430 mm to 485 mm), measured to the top of the toilet seat (see Fig. 29(b)). Seats shall not be sprung to return to a lifted position. Appendix Note

4.16.4* Grab Bars. Grab bars for water closets not located in stalls shall comply with 4.26 and Fig. 29. The grab bar behind the water closet shall be 36 in (915 mm) minimum. Appendix Note

4.26.3 Structural Strength. The structural strength of grab bars, tub and shower seats, fasteners, and mounting devices shall meet the following specification:

(1) Bending stress in a grab bar or seat induced by the maximum bending moment from the application of 250 lbf (1112N) shall be less than the allowable stress for the material of the grab bar or seat.

(2) Shear stress induced in a grab bar or seat by the application of 250 lbf (1112N) shall be less than the allowable shear stress for the material of the grab bar or seat. If the connection between the grab bar or seat and its mounting bracket or other support is considered to be fully restrained, then direct and torsional shear stresses shall be totaled for the combined shear stress, which shall not exceed the allowable shear stress.

(3) Shear force induced in a fastener or mounting device from the application of 250 lbf (1112N) shall be less than the allowable lateral load of either the fastener or mounting device or the supporting structure, whichever is the smaller allowable load.

(4) Tensile force induced in a fastener by a direct tension force of 250 lbf (1112N) plus the maximum moment from the application of 250 lbf (1112N) shall be less than the allowable withdrawal load between the fastener and the supporting structure.

(5) Grab bars shall not rotate within their fittings.

4.27 Controls and Operating Mechanisms.

4.27.1 General. Controls and operating mechanisms required to be accessible by 4.1 shall comply with 4.27.

4.27.2 Clear Floor Space. Clear floor space complying with 4.2.4 that allows a forward or a parallel approach by a person using a wheelchair shall be provided at controls, dispensers, receptacles, and other operable equipment.

4.27.3* Height. The highest operable part of controls, dispensers, receptacles, and other operable equipment shall be placed within at least one of the reach ranges specified in 4.2.5 and 4.2.6. Electrical and communications system receptacles on walls shall be mounted no less than 15 in (380 mm) above the floor. Appendix Note

EXCEPTION: These requirements do not apply where the use of special equipment dictates otherwise or where electrical and communications systems receptacles are not normally intended for use by building occupants.

4.27.4 Operation. Controls and operating mechanisms shall be operable with one hand and shall not require tight grasping, pinching, or twisting of the wrist. The force required to activate controls shall be no greater than 5 lbf (22.2 N).

---

[i] Where railings, guards or handrails are provided, edge protection must be provided and extended a minimum of 2 inches above the ground or deck surface. Edge protection is not required where a railing, guardrail or handrail is provided, if the deck surface extends a minimum of 12 inches beyond the inside face of the railing.

[ii] At least one clear floor or ground space (30 inches by 48 inches) must be provided at each location that has a railing height of 34 inches maximum. If there is no railing, at least one clear space must be provided on a pier or platform.

[iii] Fishing piers and platforms must have at least one turning area, either 60-inch turning space or a T-shaped space to allow a person using a mobility device or wheelchair to make a 180-degree turn.

[iv] Gangways are not required to have to have landings at the end, if transition plates are provided. If the slope of the transition plate is greater that 1: 20 (5%), the transition plates must have a landing at the end of the transition plate not connected to the gangway and must comply with other ramp requirements.

ADA Compliance Program

MEDFORD PARKS AND RECREATION DEPARTMENT

ADA ACCESSIBILITY SURVEY FOR PARK FACILITIES

Date: **March 3, 2016** **Estimated Cost:**

Facility: **Pear Blossom Park** **Department Notified:**

Survey by: **Jean Akers** **Date of Notification:**

Check all applicable building codes and ADAAG publications prior to any renovation or construction. This survey is only a guideline.

ITEM				RECOMMENDATIONS
Accessible Routes[1]	**n/a**	**Yes**	**No**	**Accessible Routes**
☐ Check here if section does not apply to this park and move to next section.				
1. Does the park have accessible routes to all accessible facilities within the park?	☐	☐	☒	☐ Expand existing accessible routes as needed ☒ Construct accessible routes ☒ Note: **Amphitheater area not ADA**
2. Where court sports are provided (i.e. tennis, basketball, and volleyball) are there accessible routes to each court? (Routes must connect both sides of the court)	☒	☐	☐	☐ Expand existing accessible routes as needed ☐ Construct accessible routes ☐ Note:
3. Are there accessible routes to any and all animal containment areas?	☒	☐	☐	☐ Expand existing accessible routes as needed ☐ Construct accessible routes ☐ Note:
4. Are there detectable warnings anywhere a route crosses a traffic way?	☐	☒	☐	☐ Repair as needed ☐ Note:
ITEM				**RECOMMENDATIONS**
Parking and Drop-off Areas	**n/a**	**Yes**	**No**	**Parking and Drop-off Areas**
☒ Check here if section does not apply to this park and move to next section.				
5. Are an adequate number of accessible parking spaces available? The table below gives the ADAAG requirement for new construction and alterations (for lots with more than 100 spaces refer to ADAAG). Accessible Spaces per Overall spaces	☐	☐	☐	☐ Reconfigure a reasonable number of spaces by repainting stripes. ☐ Construct accessible routes ☐ Note:

Total Spaces	Accessible Spaces Required
1 to 25	1 space
26 to 50	2 spaces
51 to 75	3 spaces
76 to 100	4 spaces

[1] Accessible routes must comply with ADAAG provisions for the location, width (minimum 36 inches) passing space, head room, surface, slope (Maximum 1:12 (or 8.33%). Accessible routes must connect all accessible elements within the facility. Accessible routes must be stable, firm and slip resistant. There is no requirement to change the surface of a playing field to an accessible surface.

6. Are an adequate number of van accessible spaces provided? At least 1 of every 8 accessible spaces must be van-accessible (with a minimum of 1 van-accessible space in all cases.)	☐	☐	☐	☐ Reconfigure to provide van-accessible space(s).
7. Are the access aisles part of the accessible route?	☐	☐	☐	☐ Add curb ramps. ☐ Reconstruct sidewalk
8. Are the accessible spaces closest to the accessible entrance?	☐	☐	☐	☐ Reconfigure spaces.
9. Are accessible spaces marked with and International Symbol of Accessibility? Are there signs reading "Van Accessible" at van spaces?	☐	☐	☐	☐ Add signs, placed so that they are not obstructed by cars.
10. Is there an enforcement procedure to ensure that accessible parking is used only by those who need it?	☐	☐	☐	☐ Implement a policy to check periodically for violators and report them to the proper authorities.
Team Player Seating Areas	**n/a**	**Yes**	**No**	**Team Player Seating Areas**
☒ Check here if section does not apply to this park and move to next section.				
11. Do fixed team or player seating areas contain the required number of wheelchair spaces and companion seats required by ADAAG?	☐	☐	☐	☐ Renovate as needed ☐ Install accessible seating area ☐ Note
Restrooms	**n/a**	**Yes**	**No**	**Restrooms**
☒ Check here if section does not apply to this park and move to next section.				
12. If rest rooms are available to the public, is at least one rest room (either one for each sex, or unisex) fully accessible?	☐	☐	☐	☐ Reconfigure rest room. ☐ Combine rest rooms to create one unisex accessible rest room. ☐ Note:
13. Are there signs at inaccessible rest rooms that give directions to accessible ones?	☐	☐	☐	☐ Install accessible signs. ☐ Note:
14. Is there tactile signage identifying rest rooms? *Note: Mount signs on the wall, on the latch side of the door, complying with the permanent signage.*	☐	☐	☐	☐ Add accessible signage, placed to the side of the door, 60 inches to centerline (not on the door itself). ☐ If symbols are used, add supplementary verbal signage. ☐ Note:
15. Are pictograms or symbols used to identify rest rooms, and, if used, are raised characters and braille included below?	☐	☐	☐	☐ If symbols are used, add supplementary verbal signage with raised characters and braille below pictogram symbol. ☐ Note:
16. Is the doorway at least 32 inches clear?	☐	☐	☐	☐ Install offset (swing-clear) hinges. ☐ Widen the doorway. ☐ Note:
17. Are doors equipped with accessible handles (operable with a closed fist), 48 inches high or less?	☐	☐	☐	☐ Lower handles. ☐ Replace knobs or latches with lever or loop handles. ☐ Add lever extensions. ☐ Install power-assisted or automatic door openers. ☐ Note:

18. Can doors be opened easily (5 lbf maximum force)?	☐	☐	☐	☐ Adjust or replace closers. ☐ Install lighter doors. ☐ Install power-assisted or automatic door openers. ☐ Note:
19. Does the entry configuration provide adequate maneuvering space for a person using a wheelchair? *Note: A person using a wheelchair needs 36 inches of clear width for forward movement, and a 5-foot diameter clear space or a T-shaped space to make turns. A minimum distance of 48 inches clear of the door swing is needed between the two doors of an entry vestibule.*	☐	☐	☐	☐ Rearrange furnishings such as chairs and trash cans. ☐ Remove inner door if there is a vestibule with two doors. ☐ Move or remove obstructing partitions. ☐ Note:
20. Is there a 36-inch-wide path to all fixtures?	☐	☐	☐	☐ Remove obstructions. ☐ Note:
21. Is the stall door operable with a closed fist, inside and out?	☐	☐	☐	☐ Replace inaccessible knobs with lever or loop handles. ☐ Add lever extensions. ☐ Note:
22. Is there a wheelchair-accessible stall that has an area of at least 5 feet by 5 feet, clear of the door swing, OR is there a stall that is less accessible but that provides greater access than a typical stall (either 36 by 69 inches or 48 by 69 inches)?	☐	☐	☐	☐ Move or remove partitions. ☐ Reverse the door swing if it is safe to do so. ☐ Note:
23. In the accessible stall, are there grab bars behind and on the side wall nearest to the toilet?	☐	☐	☐	☐ Add grab bars. ☐ Note:
24. Is the toilet seat 17 to 19 inches high?	☐	☐	☐	☐ Add raised seat. ☐ Note:
25. Does one lavatory have a 30-inch-wide by 48-inch-deep clear space in front? *Note: A maximum of 19 inches of the required depth may be under the lavatory.*	☐	☐	☐	☐ Rearrange furnishings. ☐ Replace lavatory. ☐ Remove or alter cabinetry to provide space underneath. Make sure hot pipes are covered. ☐ Move a partition or wall. ☐ Note:
26. Is the lavatory rim no higher than 34 inches?	☐	☐	☐	☐ Adjust or replace lavatory. ☐ Note:
27. Is there at least 29 inches from the floor to the bottom of the lavatory apron? (Excluding pipes)?	☐	☐	☐	☐ Adjust or replace lavatory. ☐ Note:
28. Can the faucet be operated with one closed fist?	☐	☐	☐	☐ Replace faucet handles with paddle type. ☐ Note:
29. Are soap and other dispensers and hand dryers within reach ranges (see page 7) and usable with one closed fist?	☐	☐	☐	☐ Lower dispensers. ☐ Replace with or provide additional accessible dispensers. ☐ Note:
30. Is the mirror mounted with the bottom edge of the reflecting surface 40 inches high or lower?	☐	☐	☐	☐ Lower or tilt down the mirror. ☐ Add a larger mirror anywhere in the room. ☐ Note:
Pit Toilets	**n/a**	**Yes**	**No**	**Pit Toilets**
31.				

☒ Check here if section does not apply to this park and move to next section.				
32. Is there a clear space of 60 inches by 60 inches adjacent to the toilet?	☐	☐	☐	☐ Repair as needed ☐ Note:
33. Does the height of the pit toilet riser comply with ADAAG 4.16.3?	☐	☐	☐	☐ Repair as needed ☐ Note:
34. Is the maneuvering space less than or equal to 1:50? (1:33 maximum allowed for drainage)	☐	☐	☐	☐ Repair as needed ☐ Note:
35. If the pit toilet has walls, are grab bars installed consistent with ADAAG 4.16.4?	☐	☐	☐	☐ Repair as needed ☐ Note:
36. Is the surface adjacent to the pit toilet firm and stable?	☐	☐	☐	☐ Repair as needed ☐ Note:
Utilities	**n/a**	**Yes**	**No**	**Utilities**
☒ Check here if section does not apply to this park and move to next section.				
37. Is the maneuvering space less than or equal to 1:50? (1:33 maximum allowed for drainage)	☐	☐	☐	☐ Repair as needed ☐ Note:
38. Is the surface adjacent to the utility firm and stable?	☐	☐	☐	☐ Repair as needed ☐ Note:
39. Are fixed water spouts located 28 inches minimum to 36 inches maximum above the ground or floor space?	☐	☐	☐	☐ Repair as needed ☐ Note:
40. Is the maneuvering space less than or equal to 1:50? (1:33 maximum allowed for drainage)	☐	☐	☐	☐ Repair as needed ☐ Note:
Drinking Fountains	**n/a**	**Yes**	**No**	**Drinking Fountains**
☐ Check here if section does not apply to this park and move to next section.				
41. Is there at least one fountain with clear floor space of at least 30 by 48 inches in front?	☐	☒	☐	☐ Clear more room by rearranging or removing furnishings. ☒ Note: **North fountain=compliant; South fountain has no clear floor space**
42. Is there one fountain with its spout no higher than 36 inches from the ground, and another with a standard height spout (or a single "hi-lo" fountain)?	☐	☒	☐	☐ Provide cup dispensers for fountains with spouts that are too high. ☐ Provide accessible water cooler. ☐ Note:
43. Are controls mounted on the front or on the side near the front edge, and operable with one closed fist?	☐	☒	☐	☐ Replace the controls. ☐ Note:
44. Is each water fountain cane-detectable (located within 27 inches off the floor or protruding less than 4 inches from the wall, into the circulation path?	☐	☐	☒	☐ Place a planter or other cane-detectable barrier on each side at floor level. ☒ Note: **28.5"**
Telephones	**n/a**	**Yes**	**No**	**Telephones**
☒ Check here if section does not apply to this park and move to next section.				
45. If pay or public use phones are provided, is there clear floor space of at least 30 by 48 inches in front of at least one?	☐	☐	☐	☐ Move furnishings. ☐ Replace booth with open station. ☐ Note:
46. Is the highest operable part of the phone no higher than 48 inches (up to 54 inches if a side approach is possible)?	☐	☐	☐	☐ Lower telephone. ☐ Note:
47. Does the phone protrude no more than 4 inches into the circulation space?	☐	☐	☐	☐ Place a cane-detectable barrier on each side at floor level. ☐ Note:

48. Does the phone have push-button controls?	☐	☐	☐	☐ Contact phone company to install push-buttons. ☐ Note:
49. Is the phone hearing-aid compatible?	☐	☐	☐	☐ Contact phone company to replace with hearing-aid compatible phone. ☐ Note:
50. Is the phone adapted with volume control?	☐	☐	☐	☐ Contact the phone company to add volume control. ☐ Note:
51. Is the phone with volume control identified with appropriate signage?	☐	☐	☐	☐ Add signage. ☐ Note:
52. If there are four or more public phones in the building, is one of the phones equipped with a text telephone (TT or TDD)?	☐	☐	☐	☐ Install a text telephone. ☐ Have a portable text telephone available. ☐ Provide a shelf and outlet next to phone. ☐ Note:
53. Is the location of the text telephone identified by accessible signage bearing the International TDD Symbol?	☐	☐	☐	☐ Add signage. ☐ Note:

Directional and Informational Signage	**n/a**	**Yes**	**No**	**Directional and Informational Signage**
☒ Check here if section does not apply to this park and move to next section.				
54. If mounted about 80 inches, do they have letters at least 3 inches high, with high contrast, and non-glare finish?	☐	☐	☐	☐ Review requirements and replace signs as needed, meeting the requirements for character size, contrast, and finish. ☐ Note:
55. Do directional and informational signs comply with legibility requirements? 56. (Building directories or temporary signs need not comply.)	☐	☐	☐	☐ Review requirements and replace signs as needed, meeting the requirements for character size, contrast, and finish. ☐ Note:

Seats, Tables and Counters	**n/a**	**Yes**	**No**	**Seats, Tables and Counters**
☐ Check here if section does not apply to this park and move to next section.				
50. Are the spaces for wheelchair seating distributed throughout? (Cover or uncovered gathering areas, bleachers)	☐	☒	☐	☐ Rearrange tables to allow room for wheelchairs in seating areas throughout the area. ☐ Remove some fixed seating. ☐ Note:
51. If picnic tables are provided, are at least 50% and no less than two of the tables, accessible?	☐	☐	☒	☐ Replace as needed ☒ Note: **4 out of 9 tables have one W/C space**
52. Are knee spaces at accessible picnic tables at least 27 inches high, 30 inches wide, and 19 inches deep?	☐	☐	☒	☐ Replace or raise tables. ☒ Note: **28" widths; 9" depths**
53. Are picnic tables spaced such that all areas of the table are accessible?	☐	☐	☒	☐ Rearrange tables to allow room for wheelchairs in seating areas throughout the area. ☐ Remove some fixed seating. ☐ Note:
54. At each type of cashier counter, is there a portion of the main counter that is no more than 36 inches high?	☒	☐	☐	☐ Provide a lower auxiliary counter or folding shelf. ☐ Arrange the counter and surrounding furnishings to create a space to hand items back and forth.

				☐ Note:
55. Is there a portion of food-ordering counters that is no more than 36 inches high, or is there space at the side for passing items to customers who have difficulty reaching over a high counter?	☐	☐	☐	☐ Lower section of counter. ☐ Arrange the counter and surrounding furnishings to create a space to pass items. ☐ Note:
Fire Rings	**n/a**	**Yes**	**No**	**Fire Rings**
☒ Check here if section does not apply to this park and move to next section.				
56. Do all fire rings have a clear space extending a minimum 48" deep by 48" wide at all usable portions of the ring?	☐	☐	☐	☐ Install clear spaces as needed ☐ Note:
57. Are the clear spaces around the fire pit on a firm and stable surface?	☐	☐	☐	☐ Correct as needed ☐ Note:
58. Is the fire surface height a minimum of 9" above the ground/floor?	☐	☐	☐	☐ Construct or renovate pits to meet clearances ☐ Note:
59. Are the slopes around fire pits not more than 1:50?	☐	☐	☐	☐ Construct or renovate pits to meet clearances ☐ Note:
Cooking Surfaces, Grills, Pedestal Grills[2]	**n/a**	**Yes**	**No**	**Cooking Surfaces, Grills, Pedestal Grills**
☒ Check here if section does not apply to this park and move to next section.				
60. Are accessible cooking features dispersed throughout the area and among the types provided?	☐	☐	☐	☐ Evenly disperse cooking features ☐ Note:
61. Are accessible cooking feature surfaces installed between 15 inches and 34 inches above the ground/floor?	☐	☐	☐	☐ Install as required ☐ Note:
62. Do operating controls and mechanisms comply with current ADAAG 4.27.1 (General) 4.27.2 (Clear Floor Space and 4.27.3 (Height)?	☐	☐	☐	☐ Install as required ☐ Note:
Fixed Trash/Recycling Containers	**n/a**	**Yes**	**No**	**Fixed Trash/Recycling Containers**
☒ Check here if section does not apply to this park and move to next section.				
63. Are trash and recycling containers accessible and do they comply with ADAAG 4.27?	☐	☐	☐	☐ Replace as needed ☐ Note:
Overlooks/Viewing Areas	**n/a**	**Yes**	**No**	**Overlooks/Viewing Areas**
☐ Check here if section does not apply to this park and move to next section.				
64. Are all viewing areas on an accessible route?	☐	☐	☒	☒ Install accessible paths as needed ☒ Note: **Grass amphitheater access via steps or grass**
65. Are all viewing areas constructed to provide an unobstructed view?	☐	☒	☐	☒ Repair as needed ☐ Note:
66. Is there at least one maneuvering space that complies with ADAAG 4.2.3?	☐	☐	☒	☒ Repair as needed ☐ Note:
67. Is the ground surface firm and stable?	☐	☐	☒	☐ Repair as needed ☐ Note:

[2] Where there is only one cooking surface, grill or pedestal grill in a provided picnic area, it shall be accessible. Where multiple cooking features are provided in a picnic area, 50 percent, but no less than 2 shall be accessible.

68. Is the maneuvering space less than or equal to 1:50? (1:33 maximum allowed for drainage)	☐	☐	☒	☐ Repair as needed ☐ Note:
Telescopes/Periscopes	**n/a**	**Yes**	**No**	**Telescopes/Periscopes**
☒ Check here if section does not apply to this park and move to next section.				
69. Are at least 20%, but not less than one, telescope or periscope that complies with ADAAG 4.27?	☐	☐	☐	☐ Repair as needed ☐ Note:
70. Are the eye pieces usable from a seated position?	☐	☐	☐	☐ Repair as needed ☐ Note:
71. Is the ground surface firm and stable?	☐	☐	☐	☐ Repair as needed ☐ Note:
72. Is the maneuvering space less than or equal to 1:50? (1:33 maximum allowed for drainage)	☐	☐	☐	☐ Repair as needed ☐ Note:
Benches	**n/a**	**Yes**	**No**	**Benches**
☐ Check here if section does not apply to this park and move to next section.				
73. Where multiple benches are provided, are at least 50% consistent with this section?	☐	☒	☐	☐ Repair as needed ☐ Note:
74. Are accessible benches dispersed evenly throughout the park?	☐	☐	☒	☒ Disperse benches evenly throughout the park ☐ Note:
75. Of the accessible benches that are provided, do at least 50% of those benches have armrests consistent with ADAAG 4.26.3?	☐	☒	☐	☐ Repair as needed ☐ Note:
76. Are the front edges of accessible benches between 17 and 19 inches maximum above the ground/floor?	☐	☒	☐	☐ Repair as needed ☐ Note:
77. Are floor spaces adjacent to benches consistent with ADAAG 4.2.4?	☐	☒	☐	☐ Repair as needed ☐ Note:
78. Is the ground/floor surface around the accessible benches firm and stable?	☐	☒	☐	☐ Repair as needed ☐ Note:
79. Do all accessible benches have back support the full length of the bench?	☐	☒	☐	☐ Repair as needed ☐ Note:
Playground Equipment Accessibility	**n/a**	**Yes**	**No**	**Playground Equipment Accessibility**
☐ Check here if section does not apply to this park and move to next section.				
80. Is there at least one of each play component on an accessible route[3]?	☐	☐	☒	☐ Expand existing accessible routes as needed ☐ Construct accessible routes ☐ Note: **Surface is accessible**
81. Is there at least one of each ground-level play component on an accessible route?	☐	☒	☐	☐ Expand existing accessible routes as needed ☐ Construct accessible routes ☐ Note:
82. Are the play components integrated for use by all children; including those with disabilities?	☐	☐	☒	☐ Ensure play components on accessible routes can be used by all children ☐ Note: **Play components don't support**

[3] Different types of play components are based on the general experience provided by the play component. Different types include, but are no limited to, rocking, swinging, climbing, spinning and sliding. Components may be elevated or at or below ground level.

				disabled child's play.
Trails	**n/a**	**Yes**	**No**	**Trails**
☐ Check here if section does not apply to this park and move to next section.				
83. Is the clear width of the trail 36 inches?	☐	☒	☐	☐ Renovate as required ☐ Construct all new trails to code ☐ Note:
84. Are openings in the trail less than ½ inch? *Note: (Board slat spaces, etc. – Elongated openings should be placed so that the long dimension is perpendicular or diagonal to the dominate direction of travel.)*	☐	☒	☐	☐ Renovate as required ☐ Construct all new trails to code ☐ Note:
85. Is the trail free of constructed or natural barriers?	☐	☒	☐	☐ Remove as needed ☐ Note:
86. Are all overhead hazards maintained at a height that is sufficient for all expected users of the trail? (Remember, Objects that protrude into a pathway at a height greater than 27" are difficult for the blind or persons with visual disabilities who use canes to detect.)	☐	☒	☐	☐ Renovate as required ☐ Construct all new trails to code ☐ Note:
87. Is there a segment in the trail that has a 10% grade for more than 30 feet?	☐	☐	☒	☐ Construct level rest interval[4] ☐ Note:
88. Are all cross slopes a maximum of 3%?	☐	☒	☐	☐ Renovate as required ☐ Construct all new trails to code ☐ Note:
89. Are all tread obstacles a maximum of 1"?	☐	☒	☐	☐ Renovate as required ☐ Construct all new trails to code ☐ Note:
90. Are passing spaces (6" x 60") provided at maximum intervals of 200 ft. whenever the clear tread width is less then 60"?	☒	☐	☐	☐ Renovate as required ☐ Construct all new trails to code ☐ Note:
91. Does the trail have or require edge protection?	☐	☐	☒	☐ Renovate as required – Where provided, edge protection should be a minimum of 3". ☐ Construct all new trails to code ☐ Note:
92. Does the trail have signs that clearly indicate the type of use, rules and difficult conditions for the trail?	☐	☐	☒	☐ Renovate as required ☐ Construct all new trails to code ☐ Note:
93. Are there signs that warn users that changes in trail level or tread obstacles could not be removed?	☐	☐	☒	☐ Renovate as required ☐ Construct all new trails to code ☐ Note:
94. Are there detectable warnings anywhere a route crosses a traffic way?	☐	☒	☐	☐ Repair as needed ☐ Note:
Shooting Facilities	**n/a**	**Yes**	**No**	**Shooting Facilities**
☒ Check here if section does not apply to this park and move to next section.				
95. Does the English Pit range have 60-inch diameter space with slopes not steeper than 1:48 so a wheelchair can turn	☐	☐	☐	☐ Renovate as needed ☐ Install accessible seating area ☐ Note

[4] Resting intervals must be 60" minimum on length and at least as wide as the widest portion of the trail segment leading to the resting interval with a cross slope that does not exceed 3%.

around?				
96. Do the firing benches have a wheelchair accessible area with a bench between 27 and 34 inches with a minimum of 19" leg space?	☐	☐	☐	☐ Renovate as needed ☐ Install accessible seating area ☐ Note
97. If fixed firing positions are provided, at least 5% but not less than one of each type of firing position, must be served by an accessible route. Does English Pit have an accessible route?	☐	☐	☐	☐ Renovate as needed ☐ Install accessible route ☐ Note
98. Does the park have accessible routes to all target impact areas?	☐	☐	☐	☐ Expand existing accessible routes as needed ☐ Construct accessible routes ☐ Note:
Aquatic Recreation Facilities	**n/a**	**Yes**	**No**	**Aquatic Recreation Facilities**
☐ Check here if section does not apply to this park and move to next section.				
99. Is there an accessible route (36" wide) over beach areas that allow access to the water's edge?	☐	☐	☐	☐ Renovate as needed ☐ Install accessible route ☐ Note
100. Are there accessible routes with handrails that lead into designated swim areas such as ponds, lakes, etc.	☐	☐	☐	☐ Renovate as needed ☐ Install accessible route ☐ Note
Fishing piers and Platforms	**n/a**	**Yes**	**No**	**Fishing piers and Platforms**
☒ Check here if section does not apply to this park and move to next section.				
101. Does this park have a facility specifically designed and constructed for fishing?	☐	☐	☐	(Structures that were not built specifically for fishing do not need to meet ADAAG guidelines. Structures designed as fishing piers or platforms, must have an accessible route.)
102. Does the park have a gangway serving the fishing pier or platform?	☐	☐	☐	☐ Install a gangway platform – Gangway 1:12 maximum slope or at least 30 feet long. ☐ Renovate existing platform to meet code (Check specific building codes) ☐ Note
103. Does the gangway have a transition plate to the pier or platform that meets code?	☐	☐	☐	☐ Install a transition plate[5] ☐ Adjust existing transition plate to meet code ☐ Note
104. Does the gangway have handrails?	☐	☐	☐	☐ Install handrail to meet code ☐ Ensure existing rails meet code ☐ Note
105. Does the fishing pier or platform have railings, guards or handrails[6]?	☐	☐	☐	☐ Install as needed ☐ Renovate existing structure to meet code ☐ Note
106. Does the fishing pier or platform have edge protection[i]?	☐	☐	☐	☐ Install ☐ Renovate existing edge protection

[5] Gangways are not required to have to have landings at the end, if transition plates are provided. If the slope of the transition plate is greater that 1: 20 (5%), the transition plates must have a landing at the end of the transition plate not connected to the gangway and must comply with other ramp requirements.

[6] Where railings, guards or handrails are provided on a fishing pier or platform, at least 25 % of the rails must be 34 inches or less in height above the ground or dock so accommodate a person in a wheelchair. These railings must be dispersed as equally as possible to all areas of the fishing pier.

				☐ Note
107. Does the fishing pier or platform have clear floor or ground space[ii]?	☐	☐	☐	☐ Install ☐ Renovate existing edge protection ☐ Note
108. Does the fishing pier or platform have sufficient turning space[iii]?	☐	☐	☐	☐ Install ☐ Renovate existing edge protection ☐ Note
Boating Facilities	**n/a**	**Yes**	**No**	**Boating Facilities**
☒ Check here if section does not apply to this park and move to next section.				
109. Is there an accessible route to the boating facilities?	☐	☐	☐	☐ Install ☐ Renovate existing route ☐ Note
110. Does the gangway to the dock or floating dock deigned to provide for a maximum 1:12 (8.33%) slope ? *Note: Not required to be longer than 80 feet. (Elevators may be used in lieu of gangways) In smaller facilities with less than 25 boat slips, the slope of the gangway may exceed 1:12, if the gangway is at least 30 feet long.*	☐	☐	☐	☐ Install ☐ Renovate existing route ☐ Note
111. Does the gangway have a transition plate to the pier or platform that meets code[iv]?	☐	☐	☐	☐ Install a transition plate ☐ Adjust existing transition plate to meet code ☐ Note

<table>
<tr>
<td>112. Where boat slips[7] are provided, does the number of accessible slips[8] comply with the table to the right?
Note: If boat slips at a facility are not identified or demarcated by length, each 40 feet of boat slip edge along the perimeter of a pier will be counted as one boat slip</td>
<td>☐</td>
<td>☐</td>
<td>☐</td>
<td>
<table>
<tr><th colspan="2">Number of Accessible Boat Slips Required</th></tr>
<tr><td>Total Slips in Facility</td><td>Minimum Accessible Slips</td></tr>
<tr><td>1-25</td><td>1</td></tr>
<tr><td>26-50</td><td>2</td></tr>
<tr><td>50-100</td><td>3</td></tr>
<tr><td>101-150</td><td>4</td></tr>
</table>
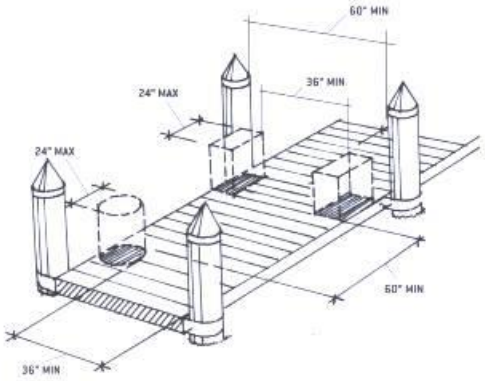

PIER CLEARANCE SPACE REDUCTION
</td>
</tr>
<tr>
<td>If the facility only has a boarding pier (see footnote # 9) at least 5% but not less than, must comply with these guidelines. The entire length of accessible boarding piers must comply with the same provisions that apply to slips.

113. Does this facility meet this regulation?</td>
<td>☐</td>
<td>☐</td>
<td>☐</td>
<td>☐ Install
☐ Renovate boarding pier
☐ Note</td>
</tr>
<tr>
<td>114. Is this facility compromised only of a boat launch with no boarding ramp or pier?</td>
<td>☐</td>
<td>☐</td>
<td>☐</td>
<td>If yes, there are no specific provisions that address access to launch ramps without boarding piers.</td>
</tr>
</table>

[7] A boat slip is the portion of a pier, main pier, finger pier, or float where a boat is berthed or moored, or used for embarking or disembarking. Boarding piers that are not part of a boat launch ramp are classified as “boat slips” for the purpose of this survey.

[8] Accessible boat slips must have clear pier space at least 60 inches wide and as long as the slip. Every 10 feet of linear pier edge serving the accessible slips must have at least one continuous clear opening that is at least 60 inches wide. The width of the clear pier space may be 36 inches wide for a length of 24 inches, as long as multiple 36-inch segments are separated by segments that are 60 inches minimum clear in width and 60 inches minimum clear in length, and the clear openings are at least 60 inches deep. Edge protection is not required

Item Number	Notes

4.2.3* Wheelchair Turning Space. The space required for a wheelchair to make a 180-degree turn is a clear space of 60 in (1525 mm) diameter (see Fig. 3(a)) or a T-shaped space (see Fig. 3(b)). Appendix Note

4.2.4* Clear Floor or Ground Space for Wheelchairs.

4.2.4.1 Size and Approach. The minimum clear floor or ground space required to accommodate a single, stationary wheelchair and occupant is 30 in by 48 in (760 mm by 1220 mm) (see Fig. 4(a)). The minimum clear floor or ground space for wheelchairs may be positioned for forward or parallel approach to an object (see Fig. 4(b) and (c)). Clear floor or ground space for wheelchairs may be part of the knee space required under some objects.

4.2.4.2 Relationship of Maneuvering Clearance to Wheelchair Spaces. One full unobstructed side of the clear floor or ground space for a wheelchair shall adjoin or overlap an accessible route or adjoin another wheelchair clear floor space. If a clear floor space is located in an alcove or otherwise confined on all or part of three sides, additional maneuvering clearances shall be provided as shown in Fig. 4(d) and (e).

4.2.4.3 Surfaces for Wheelchair Spaces. Clear floor or ground spaces for wheelchairs shall comply with 4.5. Appendix Note

4.16.3* Height. The height of water closets shall be 17 in to 19 in (430 mm to 485 mm), measured to the top of the toilet seat (see Fig. 29(b)). Seats shall not be sprung to return to a lifted position. Appendix Note

4.16.4* Grab Bars. Grab bars for water closets not located in stalls shall comply with 4.26 and Fig. 29. The grab bar behind the water closet shall be 36 in (915 mm) minimum. Appendix Note

4.26.3 Structural Strength. The structural strength of grab bars, tub and shower seats, fasteners, and mounting devices shall meet the following specification:

(1) Bending stress in a grab bar or seat induced by the maximum bending moment from the application of 250 lbf (1112N) shall be less than the allowable stress for the material of the grab bar or seat.

(2) Shear stress induced in a grab bar or seat by the application of 250 lbf (1112N) shall be less than the allowable shear stress for the material of the grab bar or seat. If the connection between the grab bar or seat and its mounting bracket or other support is considered to be fully restrained, then direct and torsional shear stresses shall be totaled for the combined shear stress, which shall not exceed the allowable shear stress.

(3) Shear force induced in a fastener or mounting device from the application of 250 lbf (1112N) shall be less than the allowable lateral load of either the fastener or mounting device or the supporting structure, whichever is the smaller allowable load.

(4) Tensile force induced in a fastener by a direct tension force of 250 lbf (1112N) plus the maximum moment from the application of 250 lbf (1112N) shall be less than the allowable withdrawal load between the fastener and the supporting structure.

(5) Grab bars shall not rotate within their fittings.

4.27 Controls and Operating Mechanisms.

4.27.1 General. Controls and operating mechanisms required to be accessible by 4.1 shall comply with 4.27.

4.27.2 Clear Floor Space. Clear floor space complying with 4.2.4 that allows a forward or a parallel approach by a person using a wheelchair shall be provided at controls, dispensers, receptacles, and other operable equipment.

4.27.3* Height. The highest operable part of controls, dispensers, receptacles, and other operable equipment shall be placed within at least one of the reach ranges specified in 4.2.5 and 4.2.6. Electrical and communications system receptacles on walls shall be mounted no less than 15 in (380 mm) above the floor. Appendix Note

EXCEPTION: These requirements do not apply where the use of special equipment dictates otherwise or where electrical and communications systems receptacles are not normally intended for use by building occupants.

4.27.4 Operation. Controls and operating mechanisms shall be operable with one hand and shall not require tight grasping, pinching, or twisting of the wrist. The force required to activate controls shall be no greater than 5 lbf (22.2 N).

---

[i] Where railings, guards or handrails are provided, edge protection must be provided and extended a minimum of 2 inches above the ground or deck surface. Edge protection is not required where a railing, guardrail or handrail is provided, if the deck surface extends a minimum of 12 inches beyond the inside face of the railing.

[ii] At least one clear floor or ground space (30 inches by 48 inches) must be provided at each location that has a railing height of 34 inches maximum. If there is no railing, at least one clear space must be provided on a pier or platform.

[iii] Fishing piers and platforms must have at least one turning area, either 60-inch turning space or a T-shaped space to allow a person using a mobility device or wheelchair to make a 180-degree turn.

[iv] Gangways are not required to have to have landings at the end, if transition plates are provided. If the slope of the transition plate is greater that 1: 20 (5%), the transition plates must have a landing at the end of the transition plate not connected to the gangway and must comply with other ramp requirements.

ADA Compliance Program

MEDFORD PARKS AND RECREATION DEPARTMENT

ADA ACCESSIBILITY SURVEY FOR PARK FACILITIES

Date: **March 3, 2016** **Estimated Cost:**

Facility: **Railroad Park** **Department Notified:**

Survey by: **Jean Akers** **Date of Notification:**

Check all applicable building codes and ADAAG publications prior to any renovation or construction. This survey is only a guideline.

ITEM				RECOMMENDATIONS
Accessible Routes[1]	**n/a**	**Yes**	**No**	**Accessible Routes**
☐ Check here if section does not apply to this park and move to next section.				
1. Does the park have accessible routes to all accessible facilities within the park?	☐	☐	☐	☐ Expand existing accessible routes as needed ☐ Construct accessible routes ☐ Note:
2. Where court sports are provided (i.e. tennis, basketball, and volleyball) are there accessible routes to each court? (Routes must connect both sides of the court)	☒	☐	☐	☐ Expand existing accessible routes as needed ☐ Construct accessible routes ☐ Note:
3. Are there accessible routes to any and all animal containment areas?	☒	☐	☐	☐ Expand existing accessible routes as needed ☐ Construct accessible routes ☐ Note:
4. Are there detectable warnings anywhere a route crosses a traffic way?	☐	☐	☒	☐ Repair as needed ☐ Note:
ITEM				**RECOMMENDATIONS**
Parking and Drop-off Areas	**n/a**	**Yes**	**No**	**Parking and Drop-off Areas**
☐ Check here if section does not apply to this park and move to next section.				
5. Are an adequate number of accessible parking spaces available? The table below gives the ADAAG requirement for new construction and alterations (for lots with more than 100 spaces refer to ADAAG). Accessible Spaces per Overall spaces	☐	☒	☐	☐ Reconfigure a reasonable number of spaces by repainting stripes. ☐ Construct accessible routes ☐ Note:

Total Spaces	Accessible Spaces Required
74 spaces	**3 spaces**
1 to 25	1 space
26 to 50	2 spaces
51 to 75	3 spaces
76 to 100	4 spaces

[1] Accessible routes must comply with ADAAG provisions for the location, width (minimum 36 inches) passing space, head room, surface, slope (Maximum 1:12 (or 8.33%). Accessible routes must connect all accessible elements within the facility. Accessible routes must be stable, firm and slip resistant. There is no requirement to change the surface of a playing field to an accessible surface.

6. Are an adequate number of van accessible spaces provided? At least 1 of every 8 accessible spaces must be van-accessible (with a minimum of 1 van-accessible space in all cases.)	☐	☒	☐	☐ Reconfigure to provide van-accessible space(s).
7. Are the access aisles part of the accessible route?	☐	☒	☐	☐ Add curb ramps. ☐ Reconstruct sidewalk
8. Are the accessible spaces closest to the accessible entrance?	☐	☐	☒	☐ Reconfigure spaces.
9. Are accessible spaces marked with and International Symbol of Accessibility? **Yes** Are there signs reading "Van Accessible" at van spaces? **No**	☐	☒	☒	☐ Add signs, placed so that they are not obstructed by cars.
10. Is there an enforcement procedure to ensure that accessible parking is used only by those who need it?	☐	☒	☐	☐ Implement a policy to check periodically for violators and report them to the proper authorities.
Team Player Seating Areas	**n/a**	**Yes**	**No**	**Team Player Seating Areas**
☒ Check here if section does not apply to this park and move to next section.				
11. Do fixed team or player seating areas contain the required number of wheelchair spaces and companion seats required by ADAAG?	☐	☐	☐	☐ Renovate as needed ☐ Install accessible seating area ☐ Note
Restrooms	**n/a**	**Yes**	**No**	**Restrooms**
☒ Check here if section does not apply to this park and move to next section. **Closed for season**				
12. If rest rooms are available to the public, is at least one rest room (either one for each sex, or unisex) fully accessible?	☐	☐	☐	☐ Reconfigure rest room. ☐ Combine rest rooms to create one unisex accessible rest room. ☐ Note: **Closed for season**
13. Are there signs at inaccessible rest rooms that give directions to accessible ones?	☐	☐	☐	☐ Install accessible signs. ☐ Note:
14. Is there tactile signage identifying rest rooms? *Note: Mount signs on the wall, on the latch side of the door, complying with the permanent signage.*	☐	☐	☐	☐ Add accessible signage, placed to the side of the door, 60 inches to centerline (not on the door itself). ☐ If symbols are used, add supplementary verbal signage. ☐ Note:
15. Are pictograms or symbols used to identify rest rooms, and, if used, are raised characters and braille included below?	☐	☐	☐	☐ If symbols are used, add supplementary verbal signage with raised characters and braille below pictogram symbol. ☐ Note:
16. Is the doorway at least 32 inches clear?	☐	☐	☐	☐ Install offset (swing-clear) hinges. ☐ Widen the doorway. ☐ Note:
17. Are doors equipped with accessible handles (operable with a closed fist), 48 inches high or less?	☐	☐	☐	☐ Lower handles. ☐ Replace knobs or latches with lever or loop handles. ☐ Add lever extensions. ☐ Install power-assisted or automatic door openers. ☐ Note:

18. Can doors be opened easily (5 lbf maximum force)?	☐	☐	☐	☐ Adjust or replace closers. ☐ Install lighter doors. ☐ Install power-assisted or automatic door openers. ☐ Note:
19. Does the entry configuration provide adequate maneuvering space for a person using a wheelchair? *Note: A person using a wheelchair needs 36 inches of clear width for forward movement, and a 5-foot diameter clear space or a T-shaped space to make turns. A minimum distance of 48 inches clear of the door swing is needed between the two doors of an entry vestibule.*	☐	☐	☐	☐ Rearrange furnishings such as chairs and trash cans. ☐ Remove inner door if there is a vestibule with two doors. ☐ Move or remove obstructing partitions. ☐ Note:
20. Is there a 36-inch-wide path to all fixtures?	☐	☐	☐	☐ Remove obstructions. ☐ Note:
21. Is the stall door operable with a closed fist, inside and out?	☐	☐	☐	☐ Replace inaccessible knobs with lever or loop handles. ☐ Add lever extensions. ☐ Note:
22. Is there a wheelchair-accessible stall that has an area of at least 5 feet by 5 feet, clear of the door swing, OR is there a stall that is less accessible but that provides greater access than a typical stall (either 36 by 69 inches or 48 by 69 inches)?	☐	☐	☐	☐ Move or remove partitions. ☐ Reverse the door swing if it is safe to do so. ☐ Note:
23. In the accessible stall, are there grab bars behind and on the side wall nearest to the toilet?	☐	☐	☐	☐ Add grab bars. ☐ Note:
24. Is the toilet seat 17 to 19 inches high?	☐	☐	☐	☐ Add raised seat. ☐ Note:
25. Does one lavatory have a 30-inch-wide by 48-inch-deep clear space in front? *Note: A maximum of 19 inches of the required depth may be under the lavatory.*	☐	☐	☐	☐ Rearrange furnishings. ☐ Replace lavatory. ☐ Remove or alter cabinetry to provide space underneath. Make sure hot pipes are covered. ☐ Move a partition or wall. ☐ Note:
26. Is the lavatory rim no higher than 34 inches?	☐	☐	☐	☐ Adjust or replace lavatory. ☐ Note:
27. Is there at least 29 inches from the floor to the bottom of the lavatory apron? (Excluding pipes)?	☐	☐	☐	☐ Adjust or replace lavatory. ☐ Note:
28. Can the faucet be operated with one closed fist?	☐	☐	☐	☐ Replace faucet handles with paddle type. ☐ Note:
29. Are soap and other dispensers and hand dryers within reach ranges (see page 7) and usable with one closed fist?	☐	☐	☐	☐ Lower dispensers. ☐ Replace with or provide additional accessible dispensers. ☐ Note:
30. Is the mirror mounted with the bottom edge of the reflecting surface 40 inches high or lower?	☐	☐	☐	☐ Lower or tilt down the mirror. ☐ Add a larger mirror anywhere in the room. ☐ Note:
Pit Toilets	**n/a**	**Yes**	**No**	**Pit Toilets**
31.				

☒ Check here if section does not apply to this park and move to next section.				
32. Is there a clear space of 60 inches by 60 inches adjacent to the toilet?	☐	☐	☐	☐ Repair as needed ☐ Note:
33. Does the height of the pit toilet riser comply with ADAAG 4.16.3?	☐	☐	☐	☐ Repair as needed ☐ Note:
34. Is the maneuvering space less than or equal to 1:50? (1:33 maximum allowed for drainage)	☐	☐	☐	☐ Repair as needed ☐ Note:
35. If the pit toilet has walls, are grab bars installed consistent with ADAAG 4.16.4?	☐	☐	☐	☐ Repair as needed ☐ Note:
36. Is the surface adjacent to the pit toilet firm and stable?	☐	☐	☐	☐ Repair as needed ☐ Note:
Utilities	**n/a**	**Yes**	**No**	**Utilities**
☒ Check here if section does not apply to this park and move to next section.				
37. Is the maneuvering space less than or equal to 1:50? (1:33 maximum allowed for drainage)	☐	☐	☐	☐ Repair as needed ☐ Note:
38. Is the surface adjacent to the utility firm and stable?	☐	☐	☐	☐ Repair as needed ☐ Note:
39. Are fixed water spouts located 28 inches minimum to 36 inches maximum above the ground or floor space?	☐	☐	☐	☐ Repair as needed ☐ Note:
40. Is the maneuvering space less than or equal to 1:50? (1:33 maximum allowed for drainage)	☐	☐	☐	☐ Repair as needed ☐ Note:
Drinking Fountains	**n/a**	**Yes**	**No**	**Drinking Fountains**
☐ Check here if section does not apply to this park and move to next section.				
41. Is there at least one fountain with clear floor space of at least 30 by 48 inches in front?	☐	☒	☐	☐ Clear more room by rearranging or removing furnishings. ☐ Note:
42. Is there one fountain with its spout no higher than 36 inches from the ground, and another with a standard height spout (or a single "hi-lo" fountain)?	☐	☒	☐	☐ Provide cup dispensers for fountains with spouts that are too high. ☐ Provide accessible water cooler. ☐ Note:
43. Are controls mounted on the front or on the side near the front edge, and operable with one closed fist?	☐	☒	☐	☐ Replace the controls. ☐ Note:
44. Is each water fountain cane-detectable (located within 27 inches off the floor or protruding less than 4 inches from the wall, into the circulation path?	☐	☐	☒	☐ Place a planter or other cane-detectable barrier on each side at floor level. ☐ Note:
Telephones	**n/a**	**Yes**	**No**	**Telephones**
☒ Check here if section does not apply to this park and move to next section.				
45. If pay or public use phones are provided, is there clear floor space of at least 30 by 48 inches in front of at least one?	☐	☐	☐	☐ Move furnishings. ☐ Replace booth with open station. ☐ Note:
46. Is the highest operable part of the phone no higher than 48 inches (up to 54 inches if a side approach is possible)?	☐	☐	☐	☐ Lower telephone. ☐ Note:
47. Does the phone protrude no more than 4 inches into the circulation space?	☐	☐	☐	☐ Place a cane-detectable barrier on each side at floor level. ☐ Note:

48. Does the phone have push-button controls?	☐	☐	☐	☐ Contact phone company to install push-buttons. ☐ Note:
49. Is the phone hearing-aid compatible?	☐	☐	☐	☐ Contact phone company to replace with hearing-aid compatible phone. ☐ Note:
50. Is the phone adapted with volume control?	☐	☐	☐	☐ Contact the phone company to add volume control. ☐ Note:
51. Is the phone with volume control identified with appropriate signage?	☐	☐	☐	☐ Add signage. ☐ Note:
52. If there are four or more public phones in the building, is one of the phones equipped with a text telephone (TT or TDD)?	☐	☐	☐	☐ Install a text telephone. ☐ Have a portable text telephone available. ☐ Provide a shelf and outlet next to phone. ☐ Note:
53. Is the location of the text telephone identified by accessible signage bearing the International TDD Symbol?	☐	☐	☐	☐ Add signage. ☐ Note:

Directional and Informational Signage	**n/a**	**Yes**	**No**	**Directional and Informational Signage**
☐ Check here if section does not apply to this park and move to next section.				
54. If mounted about 80 inches, do they have letters at least 3 inches high, with high contrast, and non-glare finish?	☐	☐	☒	☒ Review requirements and replace signs as needed, meeting the requirements for character size, contrast, and finish. ☐ Note:
55. Do directional and informational signs comply with legibility requirements? 56. (Building directories or temporary signs need not comply.)	☐	☐	☒	☒ Review requirements and replace signs as needed, meeting the requirements for character size, contrast, and finish. ☐ Note:

Seats, Tables and Counters	**n/a**	**Yes**	**No**	**Seats, Tables and Counters**
☒ Check here if section does not apply to this park and move to next section.				
50. Are the spaces for wheelchair seating distributed throughout? (Cover or uncovered gathering areas, bleachers)	☐	☐	☐	☐ Rearrange tables to allow room for wheelchairs in seating areas throughout the area. ☐ Remove some fixed seating. ☐ Note:
51. If picnic tables are provided, are at least 50% and no less than two of the tables, accessible?	☐	☐	☐	☐ Replace as needed ☐ Note:
52. Are knee spaces at accessible picnic tables at least 27 inches high, 30 inches wide, and 19 inches deep?	☐	☐	☐	☐ Replace or raise tables. ☐ Note:
53. Are picnic tables spaced such that all areas of the table are accessible?	☐	☐	☐	☐ Rearrange tables to allow room for wheelchairs in seating areas throughout the area. ☐ Remove some fixed seating. ☐ Note:
54. At each type of cashier counter, is there a portion of the main counter that is no more than 36 inches high?	☐	☐	☐	☐ Provide a lower auxiliary counter or folding shelf. ☐ Arrange the counter and surrounding furnishings to create a space to hand items back and forth.

				☐ Note:
55. Is there a portion of food-ordering counters that is no more than 36 inches high, or is there space at the side for passing items to customers who have difficulty reaching over a high counter?	☐	☐	☐	☐ Lower section of counter. ☐ Arrange the counter and surrounding furnishings to create a space to pass items. ☐ Note:
Fire Rings	**n/a**	**Yes**	**No**	**Fire Rings**
☒ Check here if section does not apply to this park and move to next section.				
56. Do all fire rings have a clear space extending a minimum 48" deep by 48" wide at all usable portions of the ring?	☐	☐	☐	☐ Install clear spaces as needed ☐ Note:
57. Are the clear spaces around the fire pit on a firm and stable surface?	☐	☐	☐	☐ Correct as needed ☐ Note:
58. Is the fire surface height a minimum of 9" above the ground/floor?	☐	☐	☐	☐ Construct or renovate pits to meet clearances ☐ Note:
59. Are the slopes around fire pits not more than 1:50?	☐	☐	☐	☐ Construct or renovate pits to meet clearances ☐ Note:
Cooking Surfaces, Grills, Pedestal Grills[2]	**n/a**	**Yes**	**No**	**Cooking Surfaces, Grills, Pedestal Grills**
☒ Check here if section does not apply to this park and move to next section.				
60. Are accessible cooking features dispersed throughout the area and among the types provided?	☐	☐	☐	☐ Evenly disperse cooking features ☐ Note:
61. Are accessible cooking feature surfaces installed between 15 inches and 34 inches above the ground/floor?	☐	☐	☐	☐ Install as required ☐ Note:
62. Do operating controls and mechanisms comply with current ADAAG 4.27.1 (General) 4.27.2 (Clear Floor Space and 4.27.3 (Height)?	☐	☐	☐	☐ Install as required ☐ Note:
Fixed Trash/Recycling Containers	**n/a**	**Yes**	**No**	**Fixed Trash/Recycling Containers**
☒ Check here if section does not apply to this park and move to next section.				
63. Are trash and recycling containers accessible and do they comply with ADAAG 4.27?	☐	☐	☐	☐ Replace as needed ☐ Note:
Overlooks/Viewing Areas	**n/a**	**Yes**	**No**	**Overlooks/Viewing Areas**
☒ Check here if section does not apply to this park and move to next section.				
64. Are all viewing areas on an accessible route?	☐	☐	☐	☐ Install accessible paths as needed ☐ Note:
65. Are all viewing areas constructed to provide an unobstructed view?	☐	☐	☐	☐ Repair as needed ☐ Note:
66. Is there at least one maneuvering space that complies with ADAAG 4.2.3?	☐	☐	☐	☐ Repair as needed ☐ Note:
67. Is the ground surface firm and stable?	☐	☐	☐	☐ Repair as needed ☐ Note:
68. Is the maneuvering space less than or	☐	☐	☐	☐ Repair as needed

[2] Where there is only one cooking surface, grill or pedestal grill in a provided picnic area, it shall be accessible. Where multiple cooking features are provided in a picnic area, 50 percent, but no less than 2 shall be accessible.

equal to 1:50? (1:33 maximum allowed for drainage)				☐ Note:
Telescopes/Periscopes	**n/a**	**Yes**	**No**	**Telescopes/Periscopes**
☒ Check here if section does not apply to this park and move to next section.				
69. Are at least 20%, but not less than one, telescope or periscope that complies with ADAAG 4.27?	☐	☐	☐	☐ Repair as needed ☐ Note:
70. Are the eye pieces usable from a seated position?	☐	☐	☐	☐ Repair as needed ☐ Note:
71. Is the ground surface firm and stable?	☐	☐	☐	☐ Repair as needed ☐ Note:
72. Is the maneuvering space less than or equal to 1:50? (1:33 maximum allowed for drainage)	☐	☐	☐	☐ Repair as needed ☐ Note:
Benches	**n/a**	**Yes**	**No**	**Benches**
☒ Check here if section does not apply to this park and move to next section.				
73. Where multiple benches are provided, are at least 50% consistent with this section?	☐	☐	☐	☐ Repair as needed ☐ Note: **only 1 bench**
74. Are accessible benches dispersed evenly throughout the park?	☐	☐	☐	☐ Disperse benches evenly throughout the park ☐ Note: just at play area
75. Of the accessible benches that are provided, do at least 50% of those benches have armrests consistent with ADAAG 4.26.3?	☐	☐	☐	☐ Repair as needed ☐ Note:
76. Are the front edges of accessible benches between 17 and 19 inches maximum above the ground/floor?	☐	☐	☐	☐ Repair as needed ☐ Note:
77. Are floor spaces adjacent to benches consistent with ADAAG 4.2.4?	☐	☐	☐	☐ Repair as needed ☐ Note:
78. Is the ground/floor surface around the accessible benches firm and stable?	☐	☐	☐	☐ Repair as needed ☐ Note:
79. Do all accessible benches have back support the full length of the bench?	☐	☐	☐	☐ Repair as needed ☐ Note:
Playground Equipment Accessibility	**n/a**	**Yes**	**No**	**Playground Equipment Accessibility**
☒ Check here if section does not apply to this park and move to next section.				
80. Is there at least one of each play component on an accessible route[3]?	☐	☐	☐	☐ Expand existing accessible routes as needed ☐ Construct accessible routes ☐ Note: bark surface
81. Is there at least one of each ground-level play component on an accessible route?	☐	☐	☐	☐ Expand existing accessible routes as needed ☐ Construct accessible routes ☐ Note:
82. Are the play components integrated for use by all children; including those with disabilities?	☐	☐	☐	☐ Ensure play components on accessible routes can be used by all children ☐ Note:
Trails	**n/a**	**Yes**	**No**	**Trails**

[3] Different types of play components are based on the general experience provided by the play component. Different types include, but are no limited to, rocking, swinging, climbing, spinning and sliding. Components may be elevated or at or below ground level.

☐ Check here if section does not apply to this park and move to next section.				
83. Is the clear width of the trail 36 inches?	☐	☒	☐	☐ Renovate as required ☐ Construct all new trails to code ☐ Note:
84. Are openings in the trail less than ½ inch? *Note: (Board slat spaces, etc. – Elongated openings should be placed so that the long dimension is perpendicular or diagonal to the dominate direction of travel.)*	☐	☐	☒	☒ Renovate as required ☐ Construct all new trails to code ☒ Note: **Pavement has large gaps where wood spacers have rotted.**
85. Is the trail free of constructed or natural barriers?	☐	☐	☐	☐ Remove as needed ☐ Note: **Uneven pavement**
86. Are all overhead hazards maintained at a height that is sufficient for all expected users of the trail? (Remember, Objects that protrude into a pathway at a height greater than 27" are difficult for the blind or persons with visual disabilities who use canes to detect.)	☐	☒	☐	☐ Renovate as required ☐ Construct all new trails to code ☐ Note:
87. Is there a segment in the trail that has a 10% grade for more than 30 feet?	☐	☐	☒	☐ Construct level rest interval[4] ☐ Note:
88. Are all cross slopes a maximum of 3%?	☐	☒	☐	☐ Renovate as required ☐ Construct all new trails to code ☐ Note:
89. Are all tread obstacles a maximum of 1"?	☐	☐	☒	☐ Renovate as required ☐ Construct all new trails to code ☐ Note:
90. Are passing spaces (6" x 60") provided at maximum intervals of 200 ft. whenever the clear tread width is less then 60"?	☒	☐	☐	☐ Renovate as required ☐ Construct all new trails to code ☐ Note:
91. Does the trail have or require edge protection?	☐	☐	☒	☐ Renovate as required – Where provided, edge protection should be a minimum of 3". ☐ Construct all new trails to code ☐ Note:
92. Does the trail have signs that clearly indicate the type of use, rules and difficult conditions for the trail?	☐	☐	☒	☐ Renovate as required ☐ Construct all new trails to code ☐ Note:
93. Are there signs that warn users that changes in trail level or tread obstacles could not be removed?	☐	☐	☒	☐ Renovate as required ☐ Construct all new trails to code ☐ Note:
94. Are there detectable warnings anywhere a route crosses a traffic way?	☐	☐	☒	☐ Repair as needed ☐ Note:
Shooting Facilities	**n/a**	**Yes**	**No**	**Shooting Facilities**
☒ Check here if section does not apply to this park and move to next section.				
95. Does the English Pit range have 60-inch diameter space with slopes not steeper than 1:48 so a wheelchair can turn around?	☐	☐	☐	☐ Renovate as needed ☐ Install accessible seating area ☐ Note
96. Do the firing benches have a wheelchair	☐	☐	☐	☐ Renovate as needed

[4] Resting intervals must be 60" minimum on length and at least as wide as the widest portion of the trail segment leading to the resting interval with a cross slope that does not exceed 3%.

accessible area with a bench between 27 and 34 inches with a minimum of 19" leg space?				☐ Install accessible seating area ☐ Note
97. If fixed firing positions are provided, at least 5% but not less than one of each type of firing position, must be served by an accessible route. Does English Pit have an accessible route?	☐	☐	☐	☐ Renovate as needed ☐ Install accessible route ☐ Note
98. Does the park have accessible routes to all target impact areas?	☐	☐	☐	☐ Expand existing accessible routes as needed ☐ Construct accessible routes ☐ Note:
Aquatic Recreation Facilities	**n/a**	**Yes**	**No**	**Aquatic Recreation Facilities**
☒ Check here if section does not apply to this park and move to next section.				
99. Is there an accessible route (36" wide) over beach areas that allow access to the water's edge?	☐	☐	☐	☐ Renovate as needed ☐ Install accessible route ☐ Note
100. Are there accessible routes with handrails that lead into designated swim areas such as ponds, lakes, etc.	☐	☐	☐	☐ Renovate as needed ☐ Install accessible route ☐ Note
Fishing piers and Platforms	**n/a**	**Yes**	**No**	**Fishing piers and Platforms**
☒ Check here if section does not apply to this park and move to next section.				
101. Does this park have a facility specifically designed and constructed for fishing?	☐	☐	☐	(Structures that were not built specifically for fishing do not need to meet ADAAG guidelines. Structures designed as fishing piers or platforms, must have an accessible route.)
102. Does the park have a gangway serving the fishing pier or platform?	☐	☐	☐	☐ Install a gangway platform – Gangway 1:12 maximum slope or at least 30 feet long. ☐ Renovate existing platform to meet code (Check specific building codes) ☐ Note
103. Does the gangway have a transition plate to the pier or platform that meets code?	☐	☐	☐	☐ Install a transition plate[5] ☐ Adjust existing transition plate to meet code ☐ Note
104. Does the gangway have handrails?	☐	☐	☐	☐ Install handrail to meet code ☐ Ensure existing rails meet code ☐ Note
105. Does the fishing pier or platform have railings, guards or handrails[6]?	☐	☐	☐	☐ Install as needed ☐ Renovate existing structure to meet code ☐ Note
106. Does the fishing pier or platform have edge protection[i]?	☐	☐	☐	☐ Install ☐ Renovate existing edge protection ☐ Note

[5] Gangways are not required to have to have landings at the end, if transition plates are provided. If the slope of the transition plate is greater that 1: 20 (5%), the transition plates must have a landing at the end of the transition plate not connected to the gangway and must comply with other ramp requirements.

[6] Where railings, guards or handrails are provided on a fishing pier or platform, at least 25 % of the rails must be 34 inches or less in height above the ground or dock so accommodate a person in a wheelchair. These railings must be dispersed as equally as possible to all areas of the fishing pier.

107. Does the fishing pier or platform have clear floor or ground space[ii]?	☐	☐	☐	☐ Install ☐ Renovate existing edge protection ☐ Note
108. Does the fishing pier or platform have sufficient turning space[iii]?	☐	☐	☐	☐ Install ☐ Renovate existing edge protection ☐ Note
Boating Facilities	**n/a**	**Yes**	**No**	**Boating Facilities**
☒ Check here if section does not apply to this park and move to next section.				
109. Is there an accessible route to the boating facilities?	☐	☐	☐	☐ Install ☐ Renovate existing route ☐ Note
110. Does the gangway to the dock or floating dock deigned to provide for a maximum 1:12 (8.33%) slope ? *Note: Not required to be longer than 80 feet. (Elevators may be used in lieu of gangways) In smaller facilities with less than 25 boat slips, the slope of the gangway may exceed 1:12, if the gangway is at least 30 feet long.*	☐	☐	☐	☐ Install ☐ Renovate existing route ☐ Note
111. Does the gangway have a transition plate to the pier or platform that meets code[iv]?	☐	☐	☐	☐ Install a transition plate ☐ Adjust existing transition plate to meet code ☐ Note

<table>
<tr><td>112. Where boat slips[7] are provided, does the number of accessible slips[8] comply with the table to the right?
Note: If boat slips at a facility are not identified or demarcated by length, each 40 feet of boat slip edge along the perimeter of a pier will be counted as one boat slip</td><td>☐</td><td>☐</td><td>☐</td><td>
<table>
<tr><th colspan="2">Number of Accessible Boat Slips Required</th></tr>
<tr><td>Total Slips in Facility</td><td>Minimum Accessible Slips</td></tr>
<tr><td>1-25</td><td>1</td></tr>
<tr><td>26-50</td><td>2</td></tr>
<tr><td>50-100</td><td>3</td></tr>
<tr><td>101-150</td><td>4</td></tr>
</table>
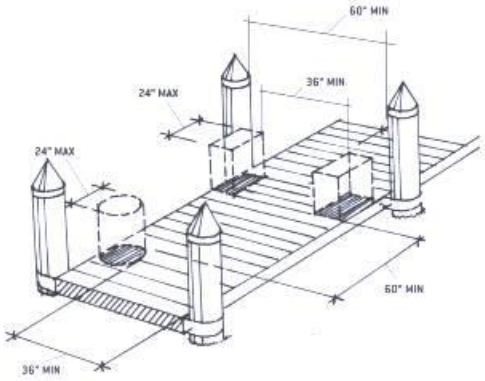

PIER CLEARANCE SPACE REDUCTION
</td></tr>
<tr><td>If the facility only has a boarding pier (see footnote # 9) at least 5% but not less than, must comply with these guidelines. The entire length of accessible boarding piers must comply with the same provisions that apply to slips.

113. Does this facility meet this regulation?</td><td>☐</td><td>☐</td><td>☐</td><td>☐ Install
☐ Renovate boarding pier
☐ Note</td></tr>
<tr><td>114. Is this facility compromised only of a boat launch with no boarding ramp or pier?</td><td>☐</td><td>☐</td><td>☐</td><td>If yes, there are no specific provisions that address access to launch ramps without boarding piers.</td></tr>
</table>

[7] A boat slip is the portion of a pier, main pier, finger pier, or float where a boat is berthed or moored, or used for embarking or disembarking. Boarding piers that are not part of a boat launch ramp are classified as “boat slips” for the purpose of this survey.

[8] Accessible boat slips must have clear pier space at least 60 inches wide and as long as the slip. Every 10 feet of linear pier edge serving the accessible slips must have at least one continuous clear opening that is at least 60 inches wide. The width of the clear pier space may be 36 inches wide for a length of 24 inches, as long as multiple 36-inch segments are separated by segments that are 60 inches minimum clear in width and 60 inches minimum clear in length, and the clear openings are at least 60 inches deep. Edge protection is not required

Item Number	Notes

4.2.3* Wheelchair Turning Space. The space required for a wheelchair to make a 180-degree turn is a clear space of 60 in (1525 mm) diameter (see Fig. 3(a)) or a T-shaped space (see Fig. 3(b)). Appendix Note

4.2.4* Clear Floor or Ground Space for Wheelchairs.

4.2.4.1 Size and Approach. The minimum clear floor or ground space required to accommodate a single, stationary wheelchair and occupant is 30 in by 48 in (760 mm by 1220 mm) (see Fig. 4(a)). The minimum clear floor or ground space for wheelchairs may be positioned for forward or parallel approach to an object (see Fig. 4(b) and (c)). Clear floor or ground space for wheelchairs may be part of the knee space required under some objects.

4.2.4.2 Relationship of Maneuvering Clearance to Wheelchair Spaces. One full unobstructed side of the clear floor or ground space for a wheelchair shall adjoin or overlap an accessible route or adjoin another wheelchair clear floor space. If a clear floor space is located in an alcove or otherwise confined on all or part of three sides, additional maneuvering clearances shall be provided as shown in Fig. 4(d) and (e).

4.2.4.3 Surfaces for Wheelchair Spaces. Clear floor or ground spaces for wheelchairs shall comply with 4.5. Appendix Note

4.16.3* Height. The height of water closets shall be 17 in to 19 in (430 mm to 485 mm), measured to the top of the toilet seat (see Fig. 29(b)). Seats shall not be sprung to return to a lifted position. Appendix Note

4.16.4* Grab Bars. Grab bars for water closets not located in stalls shall comply with 4.26 and Fig. 29. The grab bar behind the water closet shall be 36 in (915 mm) minimum. Appendix Note

4.26.3 Structural Strength. The structural strength of grab bars, tub and shower seats, fasteners, and mounting devices shall meet the following specification:

(1) Bending stress in a grab bar or seat induced by the maximum bending moment from the application of 250 lbf (1112N) shall be less than the allowable stress for the material of the grab bar or seat.

(2) Shear stress induced in a grab bar or seat by the application of 250 lbf (1112N) shall be less than the allowable shear stress for the material of the grab bar or seat. If the connection between the grab bar or seat and its mounting bracket or other support is considered to be fully restrained, then direct and torsional shear stresses shall be totaled for the combined shear stress, which shall not exceed the allowable shear stress.

(3) Shear force induced in a fastener or mounting device from the application of 250 lbf (1112N) shall be less than the allowable lateral load of either the fastener or mounting device or the supporting structure, whichever is the smaller allowable load.

(4) Tensile force induced in a fastener by a direct tension force of 250 lbf (1112N) plus the maximum moment from the application of 250 lbf (1112N) shall be less than the allowable withdrawal load between the fastener and the supporting structure.

(5) Grab bars shall not rotate within their fittings.

4.27 Controls and Operating Mechanisms.

4.27.1 General. Controls and operating mechanisms required to be accessible by 4.1 shall comply with 4.27.

4.27.2 Clear Floor Space. Clear floor space complying with 4.2.4 that allows a forward or a parallel approach by a person using a wheelchair shall be provided at controls, dispensers, receptacles, and other operable equipment.

4.27.3* Height. The highest operable part of controls, dispensers, receptacles, and other operable equipment shall be placed within at least one of the reach ranges specified in 4.2.5 and 4.2.6. Electrical and communications system receptacles on walls shall be mounted no less than 15 in (380 mm) above the floor. Appendix Note

EXCEPTION: These requirements do not apply where the use of special equipment dictates otherwise or where electrical and communications systems receptacles are not normally intended for use by building occupants.

4.27.4 Operation. Controls and operating mechanisms shall be operable with one hand and shall not require tight grasping, pinching, or twisting of the wrist. The force required to activate controls shall be no greater than 5 lbf (22.2 N).

---

[i] Where railings, guards or handrails are provided, edge protection must be provided and extended a minimum of 2 inches above the ground or deck surface. Edge protection is not required where a railing, guardrail or handrail is provided, if the deck surface extends a minimum of 12 inches beyond the inside face of the railing.

[ii] At least one clear floor or ground space (30 inches by 48 inches) must be provided at each location that has a railing height of 34 inches maximum. If there is no railing, at least one clear space must be provided on a pier or platform.

[iii] Fishing piers and platforms must have at least one turning area, either 60-inch turning space or a T-shaped space to allow a person using a mobility device or wheelchair to make a 180-degree turn.

[iv] Gangways are not required to have to have landings at the end, if transition plates are provided. If the slope of the transition plate is greater that 1: 20 (5%), the transition plates must have a landing at the end of the transition plate not connected to the gangway and must comply with other ramp requirements.

ADA Checklist for Existing Facilities

Priority 1 – Approach & Entrance

Based on the 2010 ADA Standards for Accessible Design

Project: Medford Parks ADA Transition Plan

Building

Location: Railroad Park

Date March 3, 2016

Surveyors: Jean Akers

Contact Information

An accessible route from site arrival points and an accessible entrance should be provided for everyone.

This checklist was produced by the New England ADA Center, a project of the Institute for Human Centered Design and a member of the ADA National Network. This checklist was developed under a grant from the Department of Education, NIDRR grant number H133A060092-09A. However the contents do not necessarily represent the policy of the Department of Education, and you should not assume endorsement by the Federal Government.

Questions or comments on the checklist contact the New England ADA Center at 617-695-0085 voice/tty or ADAinfo@NewEnglandADA.org

For the full set of checklists, including the checklists for recreation facilities visit www.ADAchecklist.org.

Priority 1 – Approach & Entrance				**Comments**	**Possible Solutions**
1.1	Is there at least one route from site arrival points (parking, passenger loading zones, public sidewalks and public transportation stops) that does not require the use of stairs? [See 2010 ADA Standards for Accessible Design – 206.2.1]	☒ Yes ☐ No If yes, location of route:		Photo #:	• Add a ramp • Regrade to 1:20 maximum slope • Add a lift if site constraints prevent other solutions
Parking Accessible parking spaces should be identified by size, access aisle and signage.					
1.2	If parking is provided for the public, are an adequate number of accessible spaces provided? [208.2]	☒ Yes ☐ No Total #:74 Accessible #: 3	**Total Spaces** / **Accessible Spaces** 1 - 25 / 1 26 - 50 / 2 51 - 75 / 3 76 - 100 / 4 100+ see 2010 Standards 208.2	Photo #:	• Reconfigure by repainting lines • •
1.3	Of the accessible spaces, is at least one a van accessible space?* [208.2.4]	☒ Yes ☐ No	*For every 6 or fraction of 6 parking spaces required by the table above, at least 1 should be a van accessible space.	Photo #:	* If constructed before 3/15/2012, parking is compliant if at least 1 in every 8 accessible spaces is van accessible • Reconfigure by repainting lines

1.4	Are accessible spaces at least 8 feet wide with an access aisle at least 5 feet wide? [502.2, 502.3] Note: Two spaces may share an access aisle. Check state/local requirements; some specify that each space have its own aisle.	☒ Yes ☐ No Measurement: 8'/9' & 11'/11'	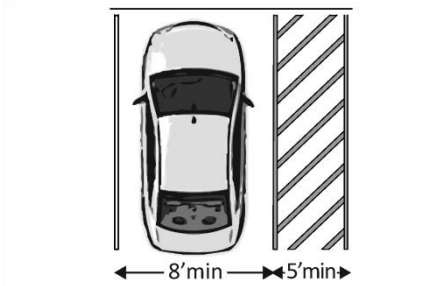	Photo #:	• Reconfigure by repainting lines • •
1.5	Is the van accessible space: At least 11 feet wide with an access aisle at least 5 feet wide? Or At least 8 feet wide with an access aisle at least 8 feet wide? [502.2]	☒ Yes ☐ No Measurement: 11'space/11'aisle ☒ Yes ☐ No Measurement: 8'space/9'aisle	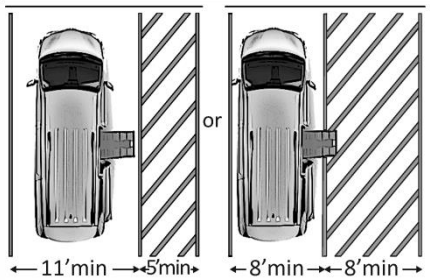	Photo #:	• Reconfigure to provide van-accessible space(s) • •
1.6	Is at least 98 inches of vertical clearance provided for the van accessible space? [502.5]	☒ Yes ☐ No Measurement:	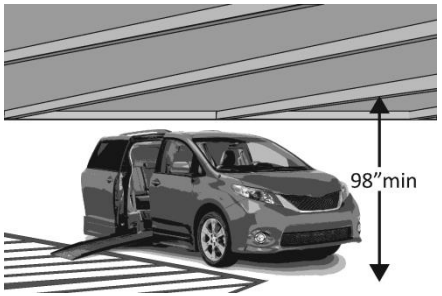	Photo #:	• Reconfigure to provide van-accessible space(s) • •

1.7	Are the access aisles marked so as to discourage parking in them? [502.3.3] Note: The marking method and color may be addressed by state/local requirements.	☒ Yes ☐ No	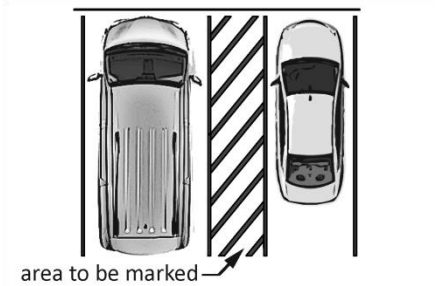	Photo #:	• Mark access aisles • •
1.8	Is the slope of the accessible parking spaces and access aisles no steeper than 1:48 in all directions? [502.4]	☒ Yes ☒ No Measurement: 2.3% in one aisle		Photo #:	• Regrade surface • •
1.9	Do the access aisles adjoin an accessible route? [502.3]	☐ Yes ☒ No	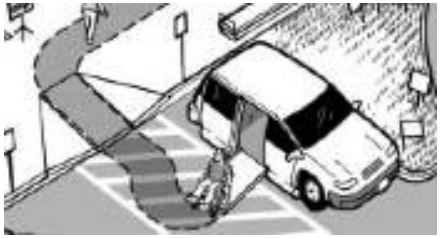	Not aligned with front entrance (marginal). Photo #:	• Create accessible route • Relocate accessible space •
1.10	Are accessible spaces identified with a sign that includes the International Symbol of Accessibility? Is the bottom of the sign at least 60 inches above the ground? [502.6] Note: The International Symbol of Accessibility is not required on the ground.	☒ Yes ☐ No ☐ Yes ☒ No Measurement: 42” and 44” sign heights	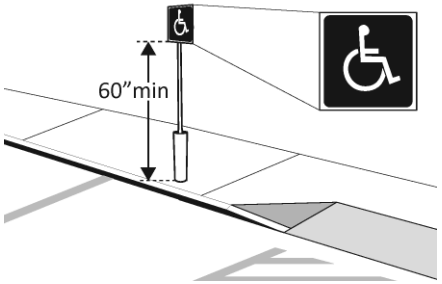	Photo #:	• Install signs at required height • •

1.11	Are there signs reading "van accessible" at van accessible spaces? [502.6]	☐ Yes ☒ No		Photo #:	• Install signs • •
1.12	Of the total parking spaces, are the accessible spaces located on the closest accessible route to the accessible entrance(s)? [208.3.1] Note: If parking serves multiple entrances, accessible parking should be dispersed.	☐ Yes ☒ No		Photo #:	• Reconfigure spaces • •
Exterior Accessible Route					
1.13	Is the route stable, firm and slip-resistant? [302.1]	☒ Yes ☐ No		Photo #:	• Repair uneven paving • Fill small bumps and breaks with patches • Replace gravel with asphalt or other surface
1.14	Is the route at least 36 inches wide? [403.5.1]	☒ Yes ☐ No Measurement:	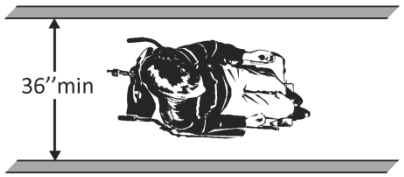		• Change or move landscaping, furnishings or other items • Widen route •

	Note: The accessible route can narrow to 32 inches min. for a max. of 24 inches. These narrower portions of the route must be at least 48 inches from each other.		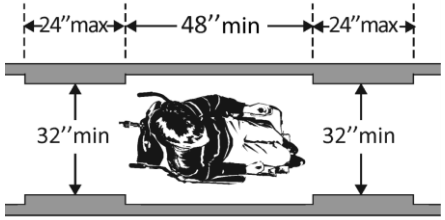 Photo #:	
1.15	If the route is greater than 200 feet in length and less than 60 inches wide, is there a passing space no less than 60 x 60 inches? [403.5.3]	☐Yes ☐No Measurement:	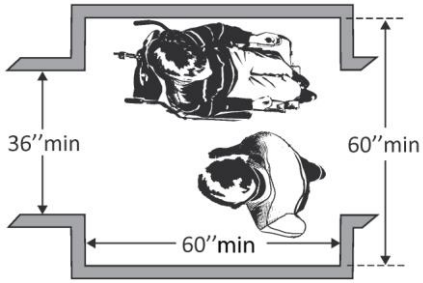 Photo #:	• Widen route for passing space • •
1.16	If there are grates or openings on the route, are the openings no larger than ½ inches? Is the long dimension perpendicular to the dominant direction of travel? [302.3]	☐Yes ☐No Measurement: ☐Yes ☐No	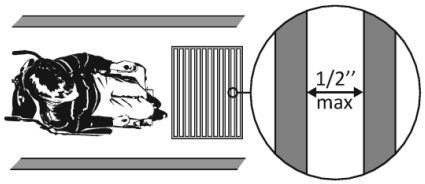 Photo #:	• Replace or move grate • •

ADA Compliance Program

MEDFORD PARKS AND RECREATION DEPARTMENT

ADA ACCESSIBILITY SURVEY FOR PARK FACILITIES

Date: **March 2, 2016** **Estimated Cost:**

Facility: **Ruhl Park** **Department Notified:**

Survey by: **Jean Akers** **Date of Notification:**

Check all applicable building codes and ADAAG publications prior to any renovation or construction. This survey is only a guideline.

ITEM				RECOMMENDATIONS
Accessible Routes[1]	**n/a**	**Yes**	**No**	**Accessible Routes**
☐ Check here if section does not apply to this park and move to next section.				
1. Does the park have accessible routes to all accessible facilities within the park?	☐	☐	☒	☐ Expand existing accessible routes as needed ☐ Construct accessible routes ☐ Note:
2. Where court sports are provided (i.e. tennis, basketball, and volleyball) are there accessible routes to each court? (Routes must connect both sides of the court)	☐	☐	☒	☐ Expand existing accessible routes as needed ☐ Construct accessible routes ☐ Note:
3. Are there accessible routes to any and all animal containment areas?	☒	☐	☐	☐ Expand existing accessible routes as needed ☐ Construct accessible routes ☐ Note:
4. Are there detectable warnings anywhere a route crosses a traffic way?	☐	☐	☒	☐ Repair as needed ☐ Note:
ITEM				**RECOMMENDATIONS**
Parking and Drop-off Areas	**n/a**	**Yes**	**No**	**Parking and Drop-off Areas**
☐ Check here if section does not apply to this park and move to next section.				
5. Are an adequate number of accessible parking spaces available? The table below gives the ADAAG requirement for new construction and alterations (for lots with more than 100 spaces refer to ADAAG). Accessible Spaces per Overall spaces Total Spaces — Accessible Spaces Required 1 to 25 — 1 space 26 to 50 — 2 spaces 51 to 75 — 3 spaces 76 to 100 — 4 spaces	☐	☒	☒	☐ Reconfigure a reasonable number of spaces by repainting stripes. ☒ Construct accessible routes ☒ Note: **On-street parking designates one H/C space. Sign too low. Needs clearer striping. Not van-accessible. No curb cuts.**

[1] Accessible routes must comply with ADAAG provisions for the location, width (minimum 36 inches) passing space, head room, surface, slope (Maximum 1:12 (or 8.33%). Accessible routes must connect all accessible elements within the facility. Accessible routes must be stable, firm and slip resistant. There is no requirement to change the surface of a playing field to an accessible surface.

6. Are an adequate number of van accessible spaces provided? At least 1 of every 8 accessible spaces must be van-accessible (with a minimum of 1 van-accessible space in all cases.)	☐	☐	☒	☒ Reconfigure to provide van-accessible space(s).
7. Are the access aisles part of the accessible route?	☐	☐	☒	☐ Add curb ramps. ☒ Reconstruct sidewalk
8. Are the accessible spaces closest to the accessible entrance?	☐	☐	☒	☐ Reconfigure spaces.
9. Are accessible spaces marked with and International Symbol of Accessibility? Are there signs reading "Van Accessible" at van spaces?	☐	☐	☒	☒ Add signs, placed so that they are not obstructed by cars.
10. Is there an enforcement procedure to ensure that accessible parking is used only by those who need it?	☒	☐	☐	☐ Implement a policy to check periodically for violators and report them to the proper authorities.
Team Player Seating Areas	**n/a**	**Yes**	**No**	**Team Player Seating Areas**
☒ Check here if section does not apply to this park and move to next section.				
11. Do fixed team or player seating areas contain the required number of wheelchair spaces and companion seats required by ADAAG?	☐	☐	☐	☐ Renovate as needed ☐ Install accessible seating area ☐ Note
Restrooms	**n/a**	**Yes**	**No**	**Restrooms**
☒ Check here if section does not apply to this park and move to next section.				
12. If rest rooms are available to the public, is at least one rest room (either one for each sex, or unisex) fully accessible?	☐	☐	☐	☐ Reconfigure rest room. ☐ Combine rest rooms to create one unisex accessible rest room. ☐ Note:
13. Are there signs at inaccessible rest rooms that give directions to accessible ones?	☐	☐	☐	☐ Install accessible signs. ☐ Note:
14. Is there tactile signage identifying rest rooms? *Note: Mount signs on the wall, on the latch side of the door, complying with the permanent signage.*	☐	☐	☐	☐ Add accessible signage, placed to the side of the door, 60 inches to centerline (not on the door itself). ☐ If symbols are used, add supplementary verbal signage. ☐ Note:
15. Are pictograms or symbols used to identify rest rooms, and, if used, are raised characters and braille included below?	☐	☐	☐	☐ If symbols are used, add supplementary verbal signage with raised characters and braille below pictogram symbol. ☐ Note:
16. Is the doorway at least 32 inches clear?	☐	☐	☐	☐ Install offset (swing-clear) hinges. ☐ Widen the doorway. ☐ Note:
17. Are doors equipped with accessible handles (operable with a closed fist), 48 inches high or less?	☐	☐	☐	☐ Lower handles. ☐ Replace knobs or latches with lever or loop handles. ☐ Add lever extensions. ☐ Install power-assisted or automatic door openers. ☐ Note:

18. Can doors be opened easily (5 lbf maximum force)?	☐	☐	☐	☐ Adjust or replace closers. ☐ Install lighter doors. ☐ Install power-assisted or automatic door openers. ☐ Note:
19. Does the entry configuration provide adequate maneuvering space for a person using a wheelchair? *Note: A person using a wheelchair needs 36 inches of clear width for forward movement, and a 5-foot diameter clear space or a T-shaped space to make turns. A minimum distance of 48 inches clear of the door swing is needed between the two doors of an entry vestibule.*	☐	☐	☐	☐ Rearrange furnishings such as chairs and trash cans. ☐ Remove inner door if there is a vestibule with two doors. ☐ Move or remove obstructing partitions. ☐ Note:
20. Is there a 36-inch-wide path to all fixtures?	☐	☐	☐	☐ Remove obstructions. ☐ Note:
21. Is the stall door operable with a closed fist, inside and out?	☐	☐	☐	☐ Replace inaccessible knobs with lever or loop handles. ☐ Add lever extensions. ☐ Note:
22. Is there a wheelchair-accessible stall that has an area of at least 5 feet by 5 feet, clear of the door swing, OR is there a stall that is less accessible but that provides greater access than a typical stall (either 36 by 69 inches or 48 by 69 inches)?	☐	☐	☐	☐ Move or remove partitions. ☐ Reverse the door swing if it is safe to do so. ☐ Note:
23. In the accessible stall, are there grab bars behind and on the side wall nearest to the toilet?	☐	☐	☐	☐ Add grab bars. ☐ Note:
24. Is the toilet seat 17 to 19 inches high?	☐	☐	☐	☐ Add raised seat. ☐ Note:
25. Does one lavatory have a 30-inch-wide by 48-inch-deep clear space in front? *Note: A maximum of 19 inches of the required depth may be under the lavatory.*	☐	☐	☐	☐ Rearrange furnishings. ☐ Replace lavatory. ☐ Remove or alter cabinetry to provide space underneath. Make sure hot pipes are covered. ☐ Move a partition or wall. ☐ Note:
26. Is the lavatory rim no higher than 34 inches?	☐	☐	☐	☐ Adjust or replace lavatory. ☐ Note:
27. Is there at least 29 inches from the floor to the bottom of the lavatory apron? (Excluding pipes)?	☐	☐	☐	☐ Adjust or replace lavatory. ☐ Note:
28. Can the faucet be operated with one closed fist?	☐	☐	☐	☐ Replace faucet handles with paddle type. ☐ Note:
29. Are soap and other dispensers and hand dryers within reach ranges (see page 7) and usable with one closed fist?	☐	☐	☐	☐ Lower dispensers. ☐ Replace with or provide additional accessible dispensers. ☐ Note:
30. Is the mirror mounted with the bottom edge of the reflecting surface 40 inches high or lower?	☐	☐	☐	☐ Lower or tilt down the mirror. ☐ Add a larger mirror anywhere in the room. ☐ Note:
Pit Toilets	**n/a**	**Yes**	**No**	**Pit Toilets**
31.				

☒ Check here if section does not apply to this park and move to next section.				
32. Is there a clear space of 60 inches by 60 inches adjacent to the toilet?	☐	☐	☐	☐ Repair as needed ☐ Note:
33. Does the height of the pit toilet riser comply with ADAAG 4.16.3?	☐	☐	☐	☐ Repair as needed ☐ Note:
34. Is the maneuvering space less than or equal to 1:50? (1:33 maximum allowed for drainage)	☐	☐	☐	☐ Repair as needed ☐ Note:
35. If the pit toilet has walls, are grab bars installed consistent with ADAAG 4.16.4?	☐	☐	☐	☐ Repair as needed ☐ Note:
36. Is the surface adjacent to the pit toilet firm and stable?	☐	☐	☐	☐ Repair as needed ☐ Note:
Utilities	**n/a**	**Yes**	**No**	**Utilities**
☒ Check here if section does not apply to this park and move to next section.				
37. Is the maneuvering space less than or equal to 1:50? (1:33 maximum allowed for drainage)	☐	☐	☐	☐ Repair as needed ☐ Note:
38. Is the surface adjacent to the utility firm and stable?	☐	☐	☐	☐ Repair as needed ☐ Note:
39. Are fixed water spouts located 28 inches minimum to 36 inches maximum above the ground or floor space?	☐	☐	☐	☐ Repair as needed ☐ Note:
40. Is the maneuvering space less than or equal to 1:50? (1:33 maximum allowed for drainage)	☐	☐	☐	☐ Repair as needed ☐ Note:
Drinking Fountains	**n/a**	**Yes**	**No**	**Drinking Fountains**
☐ Check here if section does not apply to this park and move to next section.				
41. Is there at least one fountain with clear floor space of at least 30 by 48 inches in front?	☐	☒	☐	☐ Clear more room by rearranging or removing furnishings. ☐ Note:
42. Is there one fountain with its spout no higher than 36 inches from the ground, and another with a standard height spout (or a single "hi-lo" fountain)?	☐	☒	☐	☐ Provide cup dispensers for fountains with spouts that are too high. ☐ Provide accessible water cooler. ☐ Note:
43. Are controls mounted on the front or on the side near the front edge, and operable with one closed fist?	☐	☒	☐	☐ Replace the controls. ☐ Note:
44. Is each water fountain cane-detectable (located within 27 inches off the floor or protruding less than 4 inches from the wall, into the circulation path?	☐	☒	☐	☐ Place a planter or other cane-detectable barrier on each side at floor level. ☐ Note:
Telephones	**n/a**	**Yes**	**No**	**Telephones**
☒ Check here if section does not apply to this park and move to next section.				
45. If pay or public use phones are provided, is there clear floor space of at least 30 by 48 inches in front of at least one?	☐	☐	☐	☐ Move furnishings. ☐ Replace booth with open station. ☐ Note:
46. Is the highest operable part of the phone no higher than 48 inches (up to 54 inches if a side approach is possible)?	☐	☐	☐	☐ Lower telephone. ☐ Note:
47. Does the phone protrude no more than 4 inches into the circulation space?	☐	☐	☐	☐ Place a cane-detectable barrier on each side at floor level. ☐ Note:

48. Does the phone have push-button controls?	☐	☐	☐	☐ Contact phone company to install push-buttons. ☐ Note:
49. Is the phone hearing-aid compatible?	☐	☐	☐	☐ Contact phone company to replace with hearing-aid compatible phone. ☐ Note:
50. Is the phone adapted with volume control?	☐	☐	☐	☐ Contact the phone company to add volume control. ☐ Note:
51. Is the phone with volume control identified with appropriate signage?	☐	☐	☐	☐ Add signage. ☐ Note:
52. If there are four or more public phones in the building, is one of the phones equipped with a text telephone (TT or TDD)?	☐	☐	☐	☐ Install a text telephone. ☐ Have a portable text telephone available. ☐ Provide a shelf and outlet next to phone. ☐ Note:
53. Is the location of the text telephone identified by accessible signage bearing the International TDD Symbol?	☐	☐	☐	☐ Add signage. ☐ Note:

Directional and Informational Signage	**n/a**	**Yes**	**No**	**Directional and Informational Signage**
☐ Check here if section does not apply to this park and move to next section.				
54. If mounted about 80 inches, do they have letters at least 3 inches high, with high contrast, and non-glare finish?	☐	☐	☒	☒ Review requirements and replace signs as needed, meeting the requirements for character size, contrast, and finish. ☐ Note:
55. Do directional and informational signs comply with legibility requirements? 56. (Building directories or temporary signs need not comply.)	☐	☐	☒	☒ Review requirements and replace signs as needed, meeting the requirements for character size, contrast, and finish. ☐ Note:

Seats, Tables and Counters	**n/a**	**Yes**	**No**	**Seats, Tables and Counters**
☐ Check here if section does not apply to this park and move to next section.				
50. Are the spaces for wheelchair seating distributed throughout? (Cover or uncovered gathering areas, bleachers)	☐	☐	☒	☐ Rearrange tables to allow room for wheelchairs in seating areas throughout the area. ☐ Remove some fixed seating. ☐ Note:
51. If picnic tables are provided, are at least 50% and no less than two of the tables, accessible?	☐	☐	☒	☐ Replace as needed ☐ Note: **One table in grass has W/C space**
52. Are knee spaces at accessible picnic tables at least 27 inches high, 30 inches wide, and 19 inches deep?	☐	☐	☒	☐ Replace or raise tables. ☐ Note:
53. Are picnic tables spaced such that all areas of the table are accessible?	☐	☐	☒	☐ Rearrange tables to allow room for wheelchairs in seating areas throughout the area. ☐ Remove some fixed seating. ☐ Note:
54. At each type of cashier counter, is there a portion of the main counter that is no more than 36 inches high?	☒	☐	☐	☐ Provide a lower auxiliary counter or folding shelf. ☐ Arrange the counter and surrounding furnishings to create a space to hand items back and forth.

				☐ Note:
55. Is there a portion of food-ordering counters that is no more than 36 inches high, or is there space at the side for passing items to customers who have difficulty reaching over a high counter?	☐	☐	☐	☐ Lower section of counter. ☐ Arrange the counter and surrounding furnishings to create a space to pass items. ☐ Note:
Fire Rings	**n/a**	**Yes**	**No**	**Fire Rings**
☒ Check here if section does not apply to this park and move to next section.				
56. Do all fire rings have a clear space extending a minimum 48" deep by 48" wide at all usable portions of the ring?	☐	☐	☐	☐ Install clear spaces as needed ☐ Note:
57. Are the clear spaces around the fire pit on a firm and stable surface?	☐	☐	☐	☐ Correct as needed ☐ Note:
58. Is the fire surface height a minimum of 9" above the ground/floor?	☐	☐	☐	☐ Construct or renovate pits to meet clearances ☐ Note:
59. Are the slopes around fire pits not more than 1:50?	☐	☐	☐	☐ Construct or renovate pits to meet clearances ☐ Note:
Cooking Surfaces, Grills, Pedestal Grills[2]	**n/a**	**Yes**	**No**	**Cooking Surfaces, Grills, Pedestal Grills**
☐ Check here if section does not apply to this park and move to next section.				
60. Are accessible cooking features dispersed throughout the area and among the types provided?	☐	☐	☒	☐ Evenly disperse cooking features ☐ Note: **One BBQ grill in grass near street**
61. Are accessible cooking feature surfaces installed between 15 inches and 34 inches above the ground/floor?	☐	☐	☒	☐ Install as required ☐ Note:
62. Do operating controls and mechanisms comply with current ADAAG 4.27.1 (General) 4.27.2 (Clear Floor Space and 4.27.3 (Height)?	☒	☐	☐	☐ Install as required ☐ Note:
Fixed Trash/Recycling Containers	**n/a**	**Yes**	**No**	**Fixed Trash/Recycling Containers**
☒ Check here if section does not apply to this park and move to next section.				
63. Are trash and recycling containers accessible and do they comply with ADAAG 4.27?	☐	☐	☐	☐ Replace as needed ☐ Note:
Overlooks/Viewing Areas	**n/a**	**Yes**	**No**	**Overlooks/Viewing Areas**
☒ Check here if section does not apply to this park and move to next section.				
64. Are all viewing areas on an accessible route?	☐	☐	☐	☐ Install accessible paths as needed ☐ Note:
65. Are all viewing areas constructed to provide an unobstructed view?	☐	☐	☐	☐ Repair as needed ☐ Note:
66. Is there at least one maneuvering space that complies with ADAAG 4.2.3?	☐	☐	☐	☐ Repair as needed ☐ Note:
67. Is the ground surface firm and stable?	☐	☐	☐	☐ Repair as needed ☐ Note:
68. Is the maneuvering space less than or	☐	☐	☐	☐ Repair as needed

[2] Where there is only one cooking surface, grill or pedestal grill in a provided picnic area, it shall be accessible. Where multiple cooking features are provided in a picnic area, 50 percent, but no less than 2 shall be accessible.

equal to 1:50? (1:33 maximum allowed for drainage)				☐ Note:
Telescopes/Periscopes	**n/a**	**Yes**	**No**	**Telescopes/Periscopes**
☒ Check here if section does not apply to this park and move to next section.				
69. Are at least 20%, but not less than one, telescope or periscope that complies with ADAAG 4.27?	☐	☐	☐	☐ Repair as needed ☐ Note:
70. Are the eye pieces usable from a seated position?	☐	☐	☐	☐ Repair as needed ☐ Note:
71. Is the ground surface firm and stable?	☐	☐	☐	☐ Repair as needed ☐ Note:
72. Is the maneuvering space less than or equal to 1:50? (1:33 maximum allowed for drainage)	☐	☐	☐	☐ Repair as needed ☐ Note:
Benches	**n/a**	**Yes**	**No**	**Benches**
☐ Check here if section does not apply to this park and move to next section.				
73. Where multiple benches are provided, are at least 50% consistent with this section?	☐	☐	☒	☐ Repair as needed ☐ Note: **5 benches**
74. Are accessible benches dispersed evenly throughout the park?	☐	☒	☐	☐ Disperse benches evenly throughout the park ☐ Note: just at play area
75. Of the accessible benches that are provided, do at least 50% of those benches have armrests consistent with ADAAG 4.26.3?	☐	☐	☒	☐ Repair as needed ☐ Note:
76. Are the front edges of accessible benches between 17 and 19 inches maximum above the ground/floor?	☐	☐	☒	☐ Repair as needed ☐ Note: **Heights vary**
77. Are floor spaces adjacent to benches consistent with ADAAG 4.2.4?	☐	☐	☒	☐ Repair as needed ☐ Note:
78. Is the ground/floor surface around the accessible benches firm and stable?	☐	☒	☐	☐ Repair as needed ☐ Note:
79. Do all accessible benches have back support the full length of the bench?	☐	☒	☐	☐ Repair as needed ☐ Note:
Playground Equipment Accessibility	**n/a**	**Yes**	**No**	**Playground Equipment Accessibility**
☐ Check here if section does not apply to this park and move to next section.				
80. Is there at least one of each play component on an accessible route[3]?	☐	☐	☒	☐ Expand existing accessible routes as needed ☒ Construct accessible routes ☐ Note: **ramp needed**
81. Is there at least one of each ground-level play component on an accessible route?	☐	☐	☒	☐ Expand existing accessible routes as needed ☒ Construct accessible routes ☐ Note:
82. Are the play components integrated for use by all children; including those with disabilities?	☐	☒	☐	☐ Ensure play components on accessible routes can be used by all children ☐ Note:
Trails	**n/a**	**Yes**	**No**	**Trails**

[3] Different types of play components are based on the general experience provided by the play component. Different types include, but are no limited to, rocking, swinging, climbing, spinning and sliding. Components may be elevated or at or below ground level.

☐ Check here if section does not apply to this park and move to next section.				
83. Is the clear width of the trail 36 inches?	☐	☒	☐	☐ Renovate as required ☐ Construct all new trails to code ☐ Note:
84. Are openings in the trail less than ½ inch? *Note: (Board slat spaces, etc. – Elongated openings should be placed so that the long dimension is perpendicular or diagonal to the dominate direction of travel.)*	☐	☐	☒	☐ Renovate as required ☐ Construct all new trails to code ☐ Note: **Uneven and cracked asphalt pathways**
85. Is the trail free of constructed or natural barriers?	☐	☒	☐	☐ Remove as needed ☐ Note:
86. Are all overhead hazards maintained at a height that is sufficient for all expected users of the trail? (Remember, Objects that protrude into a pathway at a height greater than 27" are difficult for the blind or persons with visual disabilities who use canes to detect.)	☐	☒	☐	☐ Renovate as required ☐ Construct all new trails to code ☐ Note:
87. Is there a segment in the trail that has a 10% grade for more than 30 feet?	☐	☐	☒	☐ Construct level rest interval[4] ☐ Note:
88. Are all cross slopes a maximum of 3%?	☐	☒	☐	☐ Renovate as required ☐ Construct all new trails to code ☐ Note:
89. Are all tread obstacles a maximum of 1"?	☐	☐	☒	☒ Renovate as required ☐ Construct all new trails to code ☐ Note:
90. Are passing spaces (6" x 60") provided at maximum intervals of 200 ft. whenever the clear tread width is less then 60"?	☐	☒	☐	☐ Renovate as required ☐ Construct all new trails to code ☐ Note:
91. Does the trail have or require edge protection?	☐	☐	☒	☐ Renovate as required – Where provided, edge protection should be a minimum of 3". ☐ Construct all new trails to code ☐ Note:
92. Does the trail have signs that clearly indicate the type of use, rules and difficult conditions for the trail?	☐	☐	☒	☐ Renovate as required ☐ Construct all new trails to code ☐ Note:
93. Are there signs that warn users that changes in trail level or tread obstacles could not be removed?	☐	☐	☒	☐ Renovate as required ☐ Construct all new trails to code ☐ Note:
94. Are there detectable warnings anywhere a route crosses a traffic way?	☐	☐	☒	☐ Repair as needed ☐ Note:
Shooting Facilities	**n/a**	**Yes**	**No**	**Shooting Facilities**
☒ Check here if section does not apply to this park and move to next section.				
95. Does the English Pit range have 60-inch diameter space with slopes not steeper than 1:48 so a wheelchair can turn around?	☐	☐	☐	☐ Renovate as needed ☐ Install accessible seating area ☐ Note
96. Do the firing benches have a wheelchair	☐	☐	☐	☐ Renovate as needed

[4] Resting intervals must be 60" minimum on length and at least as wide as the widest portion of the trail segment leading to the resting interval with a cross slope that does not exceed 3%.

accessible area with a bench between 27 and 34 inches with a minimum of 19" leg space?				☐ Install accessible seating area ☐ Note
97. If fixed firing positions are provided, at least 5% but not less than one of each type of firing position, must be served by an accessible route. Does English Pit have an accessible route?	☐	☐	☐	☐ Renovate as needed ☐ Install accessible route ☐ Note
98. Does the park have accessible routes to all target impact areas?	☐	☐	☐	☐ Expand existing accessible routes as needed ☐ Construct accessible routes ☐ Note:
Aquatic Recreation Facilities	**n/a**	**Yes**	**No**	**Aquatic Recreation Facilities**
☒ Check here if section does not apply to this park and move to next section.				
99. Is there an accessible route (36" wide) over beach areas that allow access to the water's edge?	☐	☐	☐	☐ Renovate as needed ☐ Install accessible route ☐ Note
100. Are there accessible routes with handrails that lead into designated swim areas such as ponds, lakes, etc.	☐	☐	☐	☐ Renovate as needed ☐ Install accessible route ☐ Note
Fishing piers and Platforms	**n/a**	**Yes**	**No**	**Fishing piers and Platforms**
☒ Check here if section does not apply to this park and move to next section.				
101. Does this park have a facility specifically designed and constructed for fishing?	☐	☐	☐	(Structures that were not built specifically for fishing do not need to meet ADAAG guidelines. Structures designed as fishing piers or platforms, must have an accessible route.)
102. Does the park have a gangway serving the fishing pier or platform?	☐	☐	☐	☐ Install a gangway platform – Gangway 1:12 maximum slope or at least 30 feet long. ☐ Renovate existing platform to meet code (Check specific building codes) ☐ Note
103. Does the gangway have a transition plate to the pier or platform that meets code?	☐	☐	☐	☐ Install a transition plate[5] ☐ Adjust existing transition plate to meet code ☐ Note
104. Does the gangway have handrails?	☐	☐	☐	☐ Install handrail to meet code ☐ Ensure existing rails meet code ☐ Note
105. Does the fishing pier or platform have railings, guards or handrails[6]?	☐	☐	☐	☐ Install as needed ☐ Renovate existing structure to meet code ☐ Note
106. Does the fishing pier or platform have edge protection[i]?	☐	☐	☐	☐ Install ☐ Renovate existing edge protection ☐ Note

[5] Gangways are not required to have to have landings at the end, if transition plates are provided. If the slope of the transition plate is greater that 1: 20 (5%), the transition plates must have a landing at the end of the transition plate not connected to the gangway and must comply with other ramp requirements.

[6] Where railings, guards or handrails are provided on a fishing pier or platform, at least 25 % of the rails must be 34 inches or less in height above the ground or dock so accommodate a person in a wheelchair. These railings must be dispersed as equally as possible to all areas of the fishing pier.

107. Does the fishing pier or platform have clear floor or ground space[ii]?	☐	☐	☐	☐ Install ☐ Renovate existing edge protection ☐ Note
108. Does the fishing pier or platform have sufficient turning space[iii]?	☐	☐	☐	☐ Install ☐ Renovate existing edge protection ☐ Note
Boating Facilities	**n/a**	**Yes**	**No**	**Boating Facilities**
☒ Check here if section does not apply to this park and move to next section.				
109. Is there an accessible route to the boating facilities?	☐	☐	☐	☐ Install ☐ Renovate existing route ☐ Note
110. Does the gangway to the dock or floating dock deigned to provide for a maximum 1:12 (8.33%) slope ? *Note: Not required to be longer than 80 feet. (Elevators may be used in lieu of gangways) In smaller facilities with less than 25 boat slips, the slope of the gangway may exceed 1:12, if the gangway is at least 30 feet long.*	☐	☐	☐	☐ Install ☐ Renovate existing route ☐ Note
111. Does the gangway have a transition plate to the pier or platform that meets code[iv]?	☐	☐	☐	☐ Install a transition plate ☐ Adjust existing transition plate to meet code ☐ Note

<table>
<tr><td>112. Where boat slips[7] are provided, does the number of accessible slips[8] comply with the table to the right?
Note: If boat slips at a facility are not identified or demarcated by length, each 40 feet of boat slip edge along the perimeter of a pier will be counted as one boat slip</td><td>☐</td><td>☐</td><td>☐</td><td>
<table>
<tr><th colspan="2">Number of Accessible Boat Slips Required</th></tr>
<tr><td>Total Slips in Facility</td><td>Minimum Accessible Slips</td></tr>
<tr><td>1-25</td><td>1</td></tr>
<tr><td>26-50</td><td>2</td></tr>
<tr><td>50-100</td><td>3</td></tr>
<tr><td>101-150</td><td>4</td></tr>
</table>
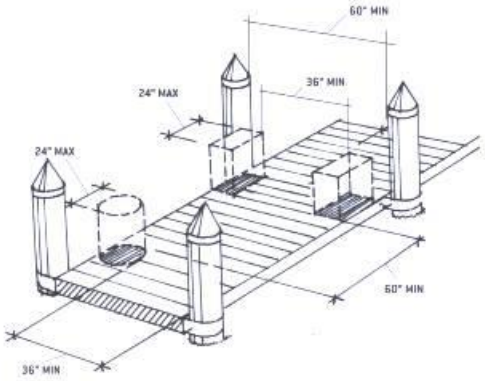

PIER CLEARANCE SPACE REDUCTION
</td></tr>
<tr><td>If the facility only has a boarding pier (see footnote # 9) at least 5% but not less than, must comply with these guidelines. The entire length of accessible boarding piers must comply with the same provisions that apply to slips.

113. Does this facility meet this regulation?</td><td>☐</td><td>☐</td><td>☐</td><td>☐ Install
☐ Renovate boarding pier
☐ Note</td></tr>
<tr><td>114. Is this facility compromised only of a boat launch with no boarding ramp or pier?</td><td>☐</td><td>☐</td><td>☐</td><td>If yes, there are no specific provisions that address access to launch ramps without boarding piers.</td></tr>
</table>

[7] A boat slip is the portion of a pier, main pier, finger pier, or float where a boat is berthed or moored, or used for embarking or disembarking. Boarding piers that are not part of a boat launch ramp are classified as “boat slips” for the purpose of this survey.

[8] Accessible boat slips must have clear pier space at least 60 inches wide and as long as the slip. Every 10 feet of linear pier edge serving the accessible slips must have at least one continuous clear opening that is at least 60 inches wide. The width of the clear pier space may be 36 inches wide for a length of 24 inches, as long as multiple 36-inch segments are separated by segments that are 60 inches minimum clear in width and 60 inches minimum clear in length, and the clear openings are at least 60 inches deep. Edge protection is not required

Item Number	Notes
	Port-a-potty located in alley is not ADA-compliant or accessible.

4.2.3* Wheelchair Turning Space. The space required for a wheelchair to make a 180-degree turn is a clear space of 60 in (1525 mm) diameter (see Fig. 3(a)) or a T-shaped space (see Fig. 3(b)). Appendix Note

4.2.4* Clear Floor or Ground Space for Wheelchairs.

4.2.4.1 Size and Approach. The minimum clear floor or ground space required to accommodate a single, stationary wheelchair and occupant is 30 in by 48 in (760 mm by 1220 mm) (see Fig. 4(a)). The minimum clear floor or ground space for wheelchairs may be positioned for forward or parallel approach to an object (see Fig. 4(b) and (c)). Clear floor or ground space for wheelchairs may be part of the knee space required under some objects.

4.2.4.2 Relationship of Maneuvering Clearance to Wheelchair Spaces. One full unobstructed side of the clear floor or ground space for a wheelchair shall adjoin or overlap an accessible route or adjoin another wheelchair clear floor space. If a clear floor space is located in an alcove or otherwise confined on all or part of three sides, additional maneuvering clearances shall be provided as shown in Fig. 4(d) and (e).

4.2.4.3 Surfaces for Wheelchair Spaces. Clear floor or ground spaces for wheelchairs shall comply with 4.5. Appendix Note

4.16.3* Height. The height of water closets shall be 17 in to 19 in (430 mm to 485 mm), measured to the top of the toilet seat (see Fig. 29(b)). Seats shall not be sprung to return to a lifted position. Appendix Note

4.16.4* Grab Bars. Grab bars for water closets not located in stalls shall comply with 4.26 and Fig. 29. The grab bar behind the water closet shall be 36 in (915 mm) minimum. Appendix Note

4.26.3 Structural Strength. The structural strength of grab bars, tub and shower seats, fasteners, and mounting devices shall meet the following specification:

(1) Bending stress in a grab bar or seat induced by the maximum bending moment from the application of 250 lbf (1112N) shall be less than the allowable stress for the material of the grab bar or seat.

(2) Shear stress induced in a grab bar or seat by the application of 250 lbf (1112N) shall be less than the allowable shear stress for the material of the grab bar or seat. If the connection between the grab bar or seat and its mounting bracket or other support is considered to be fully restrained, then direct and torsional shear stresses shall be totaled for the combined shear stress, which shall not exceed the allowable shear stress.

(3) Shear force induced in a fastener or mounting device from the application of 250 lbf (1112N) shall be less than the allowable lateral load of either the fastener or mounting device or the supporting structure, whichever is the smaller allowable load.

(4) Tensile force induced in a fastener by a direct tension force of 250 lbf (1112N) plus the maximum moment from the application of 250 lbf (1112N) shall be less than the allowable withdrawal load between the fastener and the supporting structure.

(5) Grab bars shall not rotate within their fittings.

4.27 Controls and Operating Mechanisms.

4.27.1 General. Controls and operating mechanisms required to be accessible by 4.1 shall comply with 4.27.

4.27.2 Clear Floor Space. Clear floor space complying with 4.2.4 that allows a forward or a parallel approach by a person using a wheelchair shall be provided at controls, dispensers, receptacles, and other operable equipment.

4.27.3* Height. The highest operable part of controls, dispensers, receptacles, and other operable equipment shall be placed within at least one of the reach ranges specified in 4.2.5 and 4.2.6. Electrical and communications system receptacles on walls shall be mounted no less than 15 in (380 mm) above the floor. Appendix Note

EXCEPTION: These requirements do not apply where the use of special equipment dictates otherwise or where electrical and communications systems receptacles are not normally intended for use by building occupants.

4.27.4 Operation. Controls and operating mechanisms shall be operable with one hand and shall not require tight grasping, pinching, or twisting of the wrist. The force required to activate controls shall be no greater than 5 lbf (22.2 N).

---

[i] Where railings, guards or handrails are provided, edge protection must be provided and extended a minimum of 2 inches above the ground or deck surface. Edge protection is not required where a railing, guardrail or handrail is provided, if the deck surface extends a minimum of 12 inches beyond the inside face of the railing.

[ii] At least one clear floor or ground space (30 inches by 48 inches) must be provided at each location that has a railing height of 34 inches maximum. If there is no railing, at least one clear space must be provided on a pier or platform.

[iii] Fishing piers and platforms must have at least one turning area, either 60-inch turning space or a T-shaped space to allow a person using a mobility device or wheelchair to make a 180-degree turn.

[iv] Gangways are not required to have to have landings at the end, if transition plates are provided. If the slope of the transition plate is greater that 1: 20 (5%), the transition plates must have a landing at the end of the transition plate not connected to the gangway and must comply with other ramp requirements.

ADA Compliance Program

MEDFORD PARKS AND RECREATION DEPARTMENT

ADA ACCESSIBILITY SURVEY FOR PARK FACILITIES

Date: March 2, 2016 **Estimated Cost:**

Facility: Summerfield Park **Department Notified:**

Survey by: Jean Akers **Date of Notification:**

Check all applicable building codes and ADAAG publications prior to any renovation or construction. This survey is only a guideline.

ITEM				RECOMMENDATIONS
Accessible Routes[1]	**n/a**	**Yes**	**No**	**Accessible Routes**
☐ Check here if section does not apply to this park and move to next section.				
1. Does the park have accessible routes to all accessible facilities within the park?	☐	☒	☐	☐ Expand existing accessible routes as needed ☐ Construct accessible routes ☐ Note:
2. Where court sports are provided (i.e. tennis, basketball, and volleyball) are there accessible routes to each court? (Routes must connect both sides of the court)	☒	☐	☐	☐ Expand existing accessible routes as needed ☐ Construct accessible routes ☐ Note:
3. Are there accessible routes to any and all animal containment areas?	☒	☐	☐	☐ Expand existing accessible routes as needed ☐ Construct accessible routes ☐ Note:
4. Are there detectable warnings anywhere a route crosses a traffic way?	☐	☐	☒	☐ Repair as needed ☐ Note: **Add at walkway/parking lot**
ITEM				**RECOMMENDATIONS**
Parking and Drop-off Areas	**n/a**	**Yes**	**No**	**Parking and Drop-off Areas**
☐ Check here if section does not apply to this park and move to next section.				
5. Are an adequate number of accessible parking spaces available? The table below gives the ADAAG requirement for new construction and alterations (for lots with more than 100 spaces refer to ADAAG). Accessible Spaces per Overall spaces	☐	☒	☐	☐ Reconfigure a reasonable number of spaces by repainting stripes. ☐ Construct accessible routes ☐ Note:

Total Spaces	Accessible Spaces Required
1 to 25	1 space
26 to 50	2 spaces
51 to 75	3 spaces
76 to 100	4 spaces

[1] Accessible routes must comply with ADAAG provisions for the location, width (minimum 36 inches) passing space, head room, surface, slope (Maximum 1:12 (or 8.33%). Accessible routes must connect all accessible elements within the facility. Accessible routes must be stable, firm and slip resistant. There is no requirement to change the surface of a playing field to an accessible surface.

6. Are an adequate number of van accessible spaces provided? At least 1 of every 8 accessible spaces must be van-accessible (with a minimum of 1 van-accessible space in all cases.)	☐	☒	☐	☐ Reconfigure to provide van-accessible space(s).
7. Are the access aisles part of the accessible route?	☐	☒	☐	☐ Add curb ramps. ☐ Reconstruct sidewalk
8. Are the accessible spaces closest to the accessible entrance?	☐	☒	☐	☐ Reconfigure spaces.
9. Are accessible spaces marked with and International Symbol of Accessibility? Are there signs reading "Van Accessible" at van spaces?	☐	☒	☐	☐ Add signs, placed so that they are not obstructed by cars.
10. Is there an enforcement procedure to ensure that accessible parking is used only by those who need it?	☐	☒	☐	☐ Implement a policy to check periodically for violators and report them to the proper authorities.
Team Player Seating Areas	**n/a**	**Yes**	**No**	**Team Player Seating Areas**
☒ Check here if section does not apply to this park and move to next section.				
11. Do fixed team or player seating areas contain the required number of wheelchair spaces and companion seats required by ADAAG?	☐	☐	☐	☐ Renovate as needed ☐ Install accessible seating area ☐ Note
Restrooms	**n/a**	**Yes**	**No**	**Restrooms**
☐ Check here if section does not apply to this park and move to next section.				
12. If rest rooms are available to the public, is at least one rest room (either one for each sex, or unisex) fully accessible?	☐	☒	☐	☐ Reconfigure rest room. ☐ Combine rest rooms to create one unisex accessible rest room. ☐ Note:
13. Are there signs at inaccessible rest rooms that give directions to accessible ones?	☒	☐	☐	☐ Install accessible signs. ☐ Note:
14. Is there tactile signage identifying rest rooms? *Note: Mount signs on the wall, on the latch side of the door, complying with the permanent signage.*	☐	☒	☐	☐ Add accessible signage, placed to the side of the door, 60 inches to centerline (not on the door itself). ☐ If symbols are used, add supplementary verbal signage. ☐ Note:
15. Are pictograms or symbols used to identify rest rooms, and, if used, are raised characters and braille included below?	☐	☒	☐	☐ If symbols are used, add supplementary verbal signage with raised characters and braille below pictogram symbol. ☐ Note:
16. Is the doorway at least 32 inches clear?	☐	☒	☐	☐ Install offset (swing-clear) hinges. ☐ Widen the doorway. ☐ Note:
17. Are doors equipped with accessible handles (operable with a closed fist), 48 inches high or less?	☐	☒	☐	☐ Lower handles. ☐ Replace knobs or latches with lever or loop handles. ☐ Add lever extensions. ☐ Install power-assisted or automatic door openers. ☐ Note:

18. Can doors be opened easily (5 lbf maximum force)?	☐	☐	☐	☐ Adjust or replace closers. ☐ Install lighter doors. ☐ Install power-assisted or automatic door openers. ☐ Note: **Restroom locked for winter**
19. Does the entry configuration provide adequate maneuvering space for a person using a wheelchair? *Note: A person using a wheelchair needs 36 inches of clear width for forward movement, and a 5-foot diameter clear space or a T-shaped space to make turns. A minimum distance of 48 inches clear of the door swing is needed between the two doors of an entry vestibule.*	☐	☐	☐	☐ Rearrange furnishings such as chairs and trash cans. ☐ Remove inner door if there is a vestibule with two doors. ☐ Move or remove obstructing partitions. ☐ Note:
20. Is there a 36-inch-wide path to all fixtures?	☐	☐	☐	☐ Remove obstructions. ☐ Note:
21. Is the stall door operable with a closed fist, inside and out?	☐	☐	☐	☐ Replace inaccessible knobs with lever or loop handles. ☐ Add lever extensions. ☐ Note:
22. Is there a wheelchair-accessible stall that has an area of at least 5 feet by 5 feet, clear of the door swing, OR is there a stall that is less accessible but that provides greater access than a typical stall (either 36 by 69 inches or 48 by 69 inches)?	☐	☐	☐	☐ Move or remove partitions. ☐ Reverse the door swing if it is safe to do so. ☐ Note:
23. In the accessible stall, are there grab bars behind and on the side wall nearest to the toilet?	☐	☐	☐	☐ Add grab bars. ☐ Note:
24. Is the toilet seat 17 to 19 inches high?	☐	☐	☐	☐ Add raised seat. ☐ Note:
25. Does one lavatory have a 30-inch-wide by 48-inch-deep clear space in front? *Note: A maximum of 19 inches of the required depth may be under the lavatory.*	☐	☐	☐	☐ Rearrange furnishings. ☐ Replace lavatory. ☐ Remove or alter cabinetry to provide space underneath. Make sure hot pipes are covered. ☐ Move a partition or wall. ☐ Note:
26. Is the lavatory rim no higher than 34 inches?	☐	☐	☐	☐ Adjust or replace lavatory. ☐ Note:
27. Is there at least 29 inches from the floor to the bottom of the lavatory apron? (Excluding pipes)?	☐	☐	☐	☐ Adjust or replace lavatory. ☐ Note:
28. Can the faucet be operated with one closed fist?	☐	☐	☐	☐ Replace faucet handles with paddle type. ☐ Note:
29. Are soap and other dispensers and hand dryers within reach ranges (see page 7) and usable with one closed fist?	☐	☐	☐	☐ Lower dispensers. ☐ Replace with or provide additional accessible dispensers. ☐ Note:
30. Is the mirror mounted with the bottom edge of the reflecting surface 40 inches high or lower?	☐	☐	☐	☐ Lower or tilt down the mirror. ☐ Add a larger mirror anywhere in the room. ☐ Note:
Pit Toilets	**n/a**	**Yes**	**No**	**Pit Toilets**
31.				

☒ Check here if section does not apply to this park and move to next section.				
32. Is there a clear space of 60 inches by 60 inches adjacent to the toilet?	☐	☐	☐	☐ Repair as needed ☐ Note:
33. Does the height of the pit toilet riser comply with ADAAG 4.16.3?	☐	☐	☐	☐ Repair as needed ☐ Note:
34. Is the maneuvering space less than or equal to 1:50? (1:33 maximum allowed for drainage)	☐	☐	☐	☐ Repair as needed ☐ Note:
35. If the pit toilet has walls, are grab bars installed consistent with ADAAG 4.16.4?	☐	☐	☐	☐ Repair as needed ☐ Note:
36. Is the surface adjacent to the pit toilet firm and stable?	☐	☐	☐	☐ Repair as needed ☐ Note:
Utilities	**n/a**	**Yes**	**No**	**Utilities**
☒ Check here if section does not apply to this park and move to next section.				
37. Is the maneuvering space less than or equal to 1:50? (1:33 maximum allowed for drainage)	☐	☐	☐	☐ Repair as needed ☐ Note:
38. Is the surface adjacent to the utility firm and stable?	☐	☐	☐	☐ Repair as needed ☐ Note:
39. Are fixed water spouts located 28 inches minimum to 36 inches maximum above the ground or floor space?	☐	☐	☐	☐ Repair as needed ☐ Note:
40. Is the maneuvering space less than or equal to 1:50? (1:33 maximum allowed for drainage)	☐	☐	☐	☐ Repair as needed ☐ Note:
Drinking Fountains	**n/a**	**Yes**	**No**	**Drinking Fountains**
☒ Check here if section does not apply to this park and move to next section.				
41. Is there at least one fountain with clear floor space of at least 30 by 48 inches in front?	☐	☐	☐	☐ Clear more room by rearranging or removing furnishings. ☐ Note:
42. Is there one fountain with its spout no higher than 36 inches from the ground, and another with a standard height spout (or a single "hi-lo" fountain)?	☐	☐	☐	☐ Provide cup dispensers for fountains with spouts that are too high. ☐ Provide accessible water cooler. ☐ Note:
43. Are controls mounted on the front or on the side near the front edge, and operable with one closed fist?	☐	☐	☐	☐ Replace the controls. ☐ Note:
44. Is each water fountain cane-detectable (located within 27 inches off the floor or protruding less than 4 inches from the wall, into the circulation path?	☐	☐	☐	☐ Place a planter or other cane-detectable barrier on each side at floor level. ☐ Note:
Telephones	**n/a**	**Yes**	**No**	**Telephones**
☒ Check here if section does not apply to this park and move to next section.				
45. If pay or public use phones are provided, is there clear floor space of at least 30 by 48 inches in front of at least one?	☐	☐	☐	☐ Move furnishings. ☐ Replace booth with open station. ☐ Note:
46. Is the highest operable part of the phone no higher than 48 inches (up to 54 inches if a side approach is possible)?	☐	☐	☐	☐ Lower telephone. ☐ Note:
47. Does the phone protrude no more than 4 inches into the circulation space?	☐	☐	☐	☐ Place a cane-detectable barrier on each side at floor level. ☐ Note:

48. Does the phone have push-button controls?	☐	☐	☐	☐ Contact phone company to install push-buttons. ☐ Note:
49. Is the phone hearing-aid compatible?	☐	☐	☐	☐ Contact phone company to replace with hearing-aid compatible phone. ☐ Note:
50. Is the phone adapted with volume control?	☐	☐	☐	☐ Contact the phone company to add volume control. ☐ Note:
51. Is the phone with volume control identified with appropriate signage?	☐	☐	☐	☐ Add signage. ☐ Note:
52. If there are four or more public phones in the building, is one of the phones equipped with a text telephone (TT or TDD)?	☐	☐	☐	☐ Install a text telephone. ☐ Have a portable text telephone available. ☐ Provide a shelf and outlet next to phone. ☐ Note:
53. Is the location of the text telephone identified by accessible signage bearing the International TDD Symbol?	☐	☐	☐	☐ Add signage. ☐ Note:

Directional and Informational Signage	**n/a**	**Yes**	**No**	**Directional and Informational Signage**
☐ Check here if section does not apply to this park and move to next section.				
54. If mounted about 80 inches, do they have letters at least 3 inches high, with high contrast, and non-glare finish?	☐	☐	☒	☒ Review requirements and replace signs as needed, meeting the requirements for character size, contrast, and finish. ☐ Note: **Rules sign**
55. Do directional and informational signs comply with legibility requirements? 56. (Building directories or temporary signs need not comply.)	☐	☐	☒	☒ Review requirements and replace signs as needed, meeting the requirements for character size, contrast, and finish. ☐ Note:

Seats, Tables and Counters	**n/a**	**Yes**	**No**	**Seats, Tables and Counters**
☐ Check here if section does not apply to this park and move to next section.				
50. Are the spaces for wheelchair seating distributed throughout? (Cover or uncovered gathering areas, bleachers)	☐	☐	☒	☐ Rearrange tables to allow room for wheelchairs in seating areas throughout the area. ☐ Remove some fixed seating. ☒ Note: **One table in grass; No w/c space**
51. If picnic tables are provided, are at least 50% and no less than two of the tables, accessible?	☐	☐	☒	☐ Replace as needed ☐ Note:
52. Are knee spaces at accessible picnic tables at least 27 inches high, 30 inches wide, and 19 inches deep?	☐	☐	☒	☐ Replace or raise tables. ☐ Note:
53. Are picnic tables spaced such that all areas of the table are accessible?	☐	☐	☒	☐ Rearrange tables to allow room for wheelchairs in seating areas throughout the area. ☐ Remove some fixed seating. ☐ Note:
54. At each type of cashier counter, is there a portion of the main counter that is no more than 36 inches high?	☒	☐	☐	☐ Provide a lower auxiliary counter or folding shelf. ☐ Arrange the counter and surrounding furnishings to create a space to hand

				items back and forth. ☐ Note:
55. Is there a portion of food-ordering counters that is no more than 36 inches high, or is there space at the side for passing items to customers who have difficulty reaching over a high counter?	☒	☐	☐	☐ Lower section of counter. ☐ Arrange the counter and surrounding furnishings to create a space to pass items. ☐ Note:
Fire Rings	**n/a**	**Yes**	**No**	**Fire Rings**
☒ Check here if section does not apply to this park and move to next section.				
56. Do all fire rings have a clear space extending a minimum 48" deep by 48" wide at all usable portions of the ring?	☐	☐	☐	☐ Install clear spaces as needed ☐ Note:
57. Are the clear spaces around the fire pit on a firm and stable surface?	☐	☐	☐	☐ Correct as needed ☐ Note:
58. Is the fire surface height a minimum of 9" above the ground/floor?	☐	☐	☐	☐ Construct or renovate pits to meet clearances ☐ Note:
59. Are the slopes around fire pits not more than 1:50?	☐	☐	☐	☐ Construct or renovate pits to meet clearances ☐ Note:
Cooking Surfaces, Grills, Pedestal Grills[2]	**n/a**	**Yes**	**No**	**Cooking Surfaces, Grills, Pedestal Grills**
☒ Check here if section does not apply to this park and move to next section.				
60. Are accessible cooking features dispersed throughout the area and among the types provided?	☐	☐	☐	☐ Evenly disperse cooking features ☐ Note:
61. Are accessible cooking feature surfaces installed between 15 inches and 34 inches above the ground/floor?	☐	☐	☐	☐ Install as required ☐ Note:
62. Do operating controls and mechanisms comply with current ADAAG 4.27.1 (General) 4.27.2 (Clear Floor Space and 4.27.3 (Height)?	☐	☐	☐	☐ Install as required ☐ Note:
Fixed Trash/Recycling Containers	**n/a**	**Yes**	**No**	**Fixed Trash/Recycling Containers**
☒ Check here if section does not apply to this park and move to next section.				
63. Are trash and recycling containers accessible and do they comply with ADAAG 4.27?	☐	☐	☐	☐ Replace as needed ☐ Note:
Overlooks/Viewing Areas	**n/a**	**Yes**	**No**	**Overlooks/Viewing Areas**
☒ Check here if section does not apply to this park and move to next section.				
64. Are all viewing areas on an accessible route?	☐	☐	☐	☐ Install accessible paths as needed ☐ Note:
65. Are all viewing areas constructed to provide an unobstructed view?	☐	☐	☐	☐ Repair as needed ☐ Note:
66. Is there at least one maneuvering space that complies with ADAAG 4.2.3?	☐	☐	☐	☐ Repair as needed ☐ Note:
67. Is the ground surface firm and stable?	☐	☐	☐	☐ Repair as needed ☐ Note:

[2] Where there is only one cooking surface, grill or pedestal grill in a provided picnic area, it shall be accessible. Where multiple cooking features are provided in a picnic area, 50 percent, but no less than 2 shall be accessible.

68. Is the maneuvering space less than or equal to 1:50? (1:33 maximum allowed for drainage)	☐	☐	☐	☐ Repair as needed ☐ Note:
Telescopes/Periscopes	**n/a**	**Yes**	**No**	**Telescopes/Periscopes**
☒ Check here if section does not apply to this park and move to next section.				
69. Are at least 20%, but not less than one, telescope or periscope that complies with ADAAG 4.27?	☐	☐	☐	☐ Repair as needed ☐ Note:
70. Are the eye pieces usable from a seated position?	☐	☐	☐	☐ Repair as needed ☐ Note:
71. Is the ground surface firm and stable?	☐	☐	☐	☐ Repair as needed ☐ Note:
72. Is the maneuvering space less than or equal to 1:50? (1:33 maximum allowed for drainage)	☐	☐	☐	☐ Repair as needed ☐ Note:
Benches	**n/a**	**Yes**	**No**	**Benches**
☒ Check here if section does not apply to this park and move to next section.				
73. Where multiple benches are provided, are at least 50% consistent with this section?	☐	☐	☐	☐ Repair as needed ☐ Note: **only 1 bench**
74. Are accessible benches dispersed evenly throughout the park?	☐	☐	☐	☐ Disperse benches evenly throughout the park ☐ Note: just at play area
75. Of the accessible benches that are provided, do at least 50% of those benches have armrests consistent with ADAAG 4.26.3?	☐	☐	☐	☐ Repair as needed ☐ Note:
76. Are the front edges of accessible benches between 17 and 19 inches maximum above the ground/floor?	☐	☐	☐	☐ Repair as needed ☐ Note:
77. Are floor spaces adjacent to benches consistent with ADAAG 4.2.4?	☐	☐	☐	☐ Repair as needed ☐ Note:
78. Is the ground/floor surface around the accessible benches firm and stable?	☐	☐	☐	☐ Repair as needed ☐ Note:
79. Do all accessible benches have back support the full length of the bench?	☐	☐	☐	☐ Repair as needed ☐ Note:
Playground Equipment Accessibility	**n/a**	**Yes**	**No**	**Playground Equipment Accessibility**
☐ Check here if section does not apply to this park and move to next section.				
80. Is there at least one of each play component on an accessible route[3]?	☐	☐	☒	☐ Expand existing accessible routes as needed ☒ Construct accessible routes ☐ Note: **curb barrier**
81. Is there at least one of each ground-level play component on an accessible route?	☐	☐	☒	☐ Expand existing accessible routes as needed ☒ Construct accessible routes ☐ Note:
82. Are the play components integrated for use by all children; including those with disabilities?	☐	☐	☒	☐ Ensure play components on accessible routes can be used by all children ☐ Note: **Minimal components**

[3] Different types of play components are based on the general experience provided by the play component. Different types include, but are no limited to, rocking, swinging, climbing, spinning and sliding. Components may be elevated or at or below ground level.

Trails	n/a	Yes	No	Trails
☐ Check here if section does not apply to this park and move to next section.				
83. Is the clear width of the trail 36 inches?	☐	☒	☐	☐ Renovate as required ☐ Construct all new trails to code ☐ Note:
84. Are openings in the trail less than ½ inch? *Note: (Board slat spaces, etc. – Elongated openings should be placed so that the long dimension is perpendicular or diagonal to the dominate direction of travel.)*	☐	☐	☒	☒ Renovate as required ☐ Construct all new trails to code ☒ Note: **Crack in asphalt near lower drain**
85. Is the trail free of constructed or natural barriers?	☐	☒	☐	☐ Remove as needed ☐ Note:
86. Are all overhead hazards maintained at a height that is sufficient for all expected users of the trail? (Remember, Objects that protrude into a pathway at a height greater than 27" are difficult for the blind or persons with visual disabilities who use canes to detect.)	☐	☒	☐	☐ Renovate as required ☐ Construct all new trails to code ☐ Note:
87. Is there a segment in the trail that has a 10% grade for more than 30 feet?	☐	☒	☐	☐ Construct level rest interval[4] ☐ Note: **Lower curve exceeds max.**
88. Are all cross slopes a maximum of 3%?	☐	☐	☒	☐ Renovate as required ☐ Construct all new trails to code ☒ Note: **Cross slope 3.5%**
89. Are all tread obstacles a maximum of 1"?	☐	☒	☐	☐ Renovate as required ☐ Construct all new trails to code ☐ Note:
90. Are passing spaces (6" x 60") provided at maximum intervals of 200 ft. whenever the clear tread width is less then 60"?	☒	☐	☐	☐ Renovate as required ☐ Construct all new trails to code ☐ Note:
91. Does the trail have or require edge protection?	☐	☐	☒	☐ Renovate as required – Where provided, edge protection should be a minimum of 3". ☐ Construct all new trails to code ☐ Note:
92. Does the trail have signs that clearly indicate the type of use, rules and difficult conditions for the trail?	☐	☐	☒	☐ Renovate as required ☐ Construct all new trails to code ☐ Note:
93. Are there signs that warn users that changes in trail level or tread obstacles could not be removed?	☐	☐	☒	☐ Renovate as required ☐ Construct all new trails to code ☐ Note:
94. Are there detectable warnings anywhere a route crosses a traffic way?	☐	☐	☒	☐ Repair as needed ☒ Note: **Needed at bollards**
Shooting Facilities	**n/a**	**Yes**	**No**	**Shooting Facilities**
☒ Check here if section does not apply to this park and move to next section.				
95. Does the English Pit range have 60-inch diameter space with slopes not steeper than 1:48 so a wheelchair can turn around?	☐	☐	☐	☐ Renovate as needed ☐ Install accessible seating area ☐ Note

[4] Resting intervals must be 60" minimum on length and at least as wide as the widest portion of the trail segment leading to the resting interval with a cross slope that does not exceed 3%.

96. Do the firing benches have a wheelchair accessible area with a bench between 27 and 34 inches with a minimum of 19" leg space?	☐	☐	☐	☐ Renovate as needed ☐ Install accessible seating area ☐ Note
97. If fixed firing positions are provided, at least 5% but not less than one of each type of firing position, must be served by an accessible route. Does English Pit have an accessible route?	☐	☐	☐	☐ Renovate as needed ☐ Install accessible route ☐ Note
98. Does the park have accessible routes to all target impact areas?	☐	☐	☐	☐ Expand existing accessible routes as needed ☐ Construct accessible routes ☐ Note:
Aquatic Recreation Facilities	**n/a**	**Yes**	**No**	**Aquatic Recreation Facilities**
☒ Check here if section does not apply to this park and move to next section.				
99. Is there an accessible route (36" wide) over beach areas that allow access to the water's edge?	☐	☐	☐	☐ Renovate as needed ☐ Install accessible route ☐ Note
100. Are there accessible routes with handrails that lead into designated swim areas such as ponds, lakes, etc.	☐	☐	☐	☐ Renovate as needed ☐ Install accessible route ☐ Note
Fishing piers and Platforms	**n/a**	**Yes**	**No**	**Fishing piers and Platforms**
☒ Check here if section does not apply to this park and move to next section.				
101. Does this park have a facility specifically designed and constructed for fishing?	☐	☐	☐	(Structures that were not built specifically for fishing do not need to meet ADAAG guidelines. Structures designed as fishing piers or platforms, must have an accessible route.)
102. Does the park have a gangway serving the fishing pier or platform?	☐	☐	☐	☐ Install a gangway platform – Gangway 1:12 maximum slope or at least 30 feet long. ☐ Renovate existing platform to meet code (Check specific building codes) ☐ Note
103. Does the gangway have a transition plate to the pier or platform that meets code?	☐	☐	☐	☐ Install a transition plate[5] ☐ Adjust existing transition plate to meet code ☐ Note
104. Does the gangway have handrails?	☐	☐	☐	☐ Install handrail to meet code ☐ Ensure existing rails meet code ☐ Note
105. Does the fishing pier or platform have railings, guards or handrails[6]?	☐	☐	☐	☐ Install as needed ☐ Renovate existing structure to meet code ☐ Note
106. Does the fishing pier or platform have edge protection[i]?	☐	☐	☐	☐ Install ☐ Renovate existing edge protection ☐ Note

[5] Gangways are not required to have to have landings at the end, if transition plates are provided. If the slope of the transition plate is greater that 1: 20 (5%), the transition plates must have a landing at the end of the transition plate not connected to the gangway and must comply with other ramp requirements.

[6] Where railings, guards or handrails are provided on a fishing pier or platform, at least 25 % of the rails must be 34 inches or less in height above the ground or dock so accommodate a person in a wheelchair. These railings must be dispersed as equally as possible to all areas of the fishing pier.

107. Does the fishing pier or platform have clear floor or ground space[ii]?	☐	☐	☐	☐ Install ☐ Renovate existing edge protection ☐ Note
108. Does the fishing pier or platform have sufficient turning space[iii]?	☐	☐	☐	☐ Install ☐ Renovate existing edge protection ☐ Note
Boating Facilities	**n/a**	**Yes**	**No**	**Boating Facilities**
☒ Check here if section does not apply to this park and move to next section.				
109. Is there an accessible route to the boating facilities?	☐	☐	☐	☐ Install ☐ Renovate existing route ☐ Note
110. Does the gangway to the dock or floating dock deigned to provide for a maximum 1:12 (8.33%) slope ? *Note: Not required to be longer than 80 feet. (Elevators may be used in lieu of gangways) In smaller facilities with less than 25 boat slips, the slope of the gangway may exceed 1:12, if the gangway is at least 30 feet long.*	☐	☐	☐	☐ Install ☐ Renovate existing route ☐ Note
111. Does the gangway have a transition plate to the pier or platform that meets code[iv]?	☐	☐	☐	☐ Install a transition plate ☐ Adjust existing transition plate to meet code ☐ Note

<table>
<tr>
<td>112. Where boat slips[7] are provided, does the number of accessible slips[8] comply with the table to the right?
Note: If boat slips at a facility are not identified or demarcated by length, each 40 feet of boat slip edge along the perimeter of a pier will be counted as one boat slip</td>
<td>☐</td>
<td>☐</td>
<td>☐</td>
<td>
<table>
<tr><th colspan="2">Number of Accessible Boat Slips Required</th></tr>
<tr><td>Total Slips in Facility</td><td>Minimum Accessible Slips</td></tr>
<tr><td>1-25</td><td>1</td></tr>
<tr><td>26-50</td><td>2</td></tr>
<tr><td>50-100</td><td>3</td></tr>
<tr><td>101-150</td><td>4</td></tr>
</table>
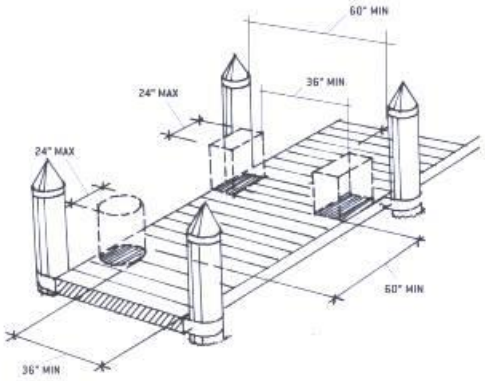

PIER CLEARANCE SPACE REDUCTION
</td>
</tr>
<tr>
<td>If the facility only has a boarding pier (see footnote # 9) at least 5% but not less than, must comply with these guidelines. The entire length of accessible boarding piers must comply with the same provisions that apply to slips.

113. Does this facility meet this regulation?</td>
<td>☐</td>
<td>☐</td>
<td>☐</td>
<td>☐ Install
☐ Renovate boarding pier
☐ Note</td>
</tr>
<tr>
<td>114. Is this facility compromised only of a boat launch with no boarding ramp or pier?</td>
<td>☐</td>
<td>☐</td>
<td>☐</td>
<td>If yes, there are no specific provisions that address access to launch ramps without boarding piers.</td>
</tr>
</table>

[7] A boat slip is the portion of a pier, main pier, finger pier, or float where a boat is berthed or moored, or used for embarking or disembarking. Boarding piers that are not part of a boat launch ramp are classified as “boat slips” for the purpose of this survey.

[8] Accessible boat slips must have clear pier space at least 60 inches wide and as long as the slip. Every 10 feet of linear pier edge serving the accessible slips must have at least one continuous clear opening that is at least 60 inches wide. The width of the clear pier space may be 36 inches wide for a length of 24 inches, as long as multiple 36-inch segments are separated by segments that are 60 inches minimum clear in width and 60 inches minimum clear in length, and the clear openings are at least 60 inches deep. Edge protection is not required

Item Number	Notes
	Add playground access ramp
	Add detectable warning strip at trail end
	Reinstall H/C sign at correct height

4.2.3* Wheelchair Turning Space. The space required for a wheelchair to make a 180-degree turn is a clear space of 60 in (1525 mm) diameter (see Fig. 3(a)) or a T-shaped space (see Fig. 3(b)). Appendix Note

4.2.4* Clear Floor or Ground Space for Wheelchairs.

4.2.4.1 Size and Approach. The minimum clear floor or ground space required to accommodate a single, stationary wheelchair and occupant is 30 in by 48 in (760 mm by 1220 mm) (see Fig. 4(a)). The minimum clear floor or ground space for wheelchairs may be positioned for forward or parallel approach to an object (see Fig. 4(b) and (c)). Clear floor or ground space for wheelchairs may be part of the knee space required under some objects.

4.2.4.2 Relationship of Maneuvering Clearance to Wheelchair Spaces. One full unobstructed side of the clear floor or ground space for a wheelchair shall adjoin or overlap an accessible route or adjoin another wheelchair clear floor space. If a clear floor space is located in an alcove or otherwise confined on all or part of three sides, additional maneuvering clearances shall be provided as shown in Fig. 4(d) and (e).

4.2.4.3 Surfaces for Wheelchair Spaces. Clear floor or ground spaces for wheelchairs shall comply with 4.5. Appendix Note

4.16.3* Height. The height of water closets shall be 17 in to 19 in (430 mm to 485 mm), measured to the top of the toilet seat (see Fig. 29(b)). Seats shall not be sprung to return to a lifted position. Appendix Note

4.16.4* Grab Bars. Grab bars for water closets not located in stalls shall comply with 4.26 and Fig. 29. The grab bar behind the water closet shall be 36 in (915 mm) minimum. Appendix Note

4.26.3 Structural Strength. The structural strength of grab bars, tub and shower seats, fasteners, and mounting devices shall meet the following specification:

(1) Bending stress in a grab bar or seat induced by the maximum bending moment from the application of 250 lbf (1112N) shall be less than the allowable stress for the material of the grab bar or seat.

(2) Shear stress induced in a grab bar or seat by the application of 250 lbf (1112N) shall be less than the allowable shear stress for the material of the grab bar or seat. If the connection between the grab bar or seat and its mounting bracket or other support is considered to be fully restrained, then direct and torsional shear stresses shall be totaled for the combined shear stress, which shall not exceed the allowable shear stress.

(3) Shear force induced in a fastener or mounting device from the application of 250 lbf (1112N) shall be less than the allowable lateral load of either the fastener or mounting device or the supporting structure, whichever is the smaller allowable load.

(4) Tensile force induced in a fastener by a direct tension force of 250 lbf (1112N) plus the maximum moment from the application of 250 lbf (1112N) shall be less than the allowable withdrawal load between the fastener and the supporting structure.

(5) Grab bars shall not rotate within their fittings.

4.27 Controls and Operating Mechanisms.

4.27.1 General. Controls and operating mechanisms required to be accessible by 4.1 shall comply with 4.27.

4.27.2 Clear Floor Space. Clear floor space complying with 4.2.4 that allows a forward or a parallel approach by a person using a wheelchair shall be provided at controls, dispensers, receptacles, and other operable equipment.

4.27.3* Height. The highest operable part of controls, dispensers, receptacles, and other operable equipment shall be placed within at least one of the reach ranges specified in 4.2.5 and 4.2.6. Electrical and communications system receptacles on walls shall be mounted no less than 15 in (380 mm) above the floor. Appendix Note

EXCEPTION: These requirements do not apply where the use of special equipment dictates otherwise or where electrical and communications systems receptacles are not normally intended for use by building occupants.

4.27.4 Operation. Controls and operating mechanisms shall be operable with one hand and shall not require tight grasping, pinching, or twisting of the wrist. The force required to activate controls shall be no greater than 5 lbf (22.2 N).

---

[i] Where railings, guards or handrails are provided, edge protection must be provided and extended a minimum of 2 inches above the ground or deck surface. Edge protection is not required where a railing, guardrail or handrail is provided, if the deck surface extends a minimum of 12 inches beyond the inside face of the railing.

[ii] At least one clear floor or ground space (30 inches by 48 inches) must be provided at each location that has a railing height of 34 inches maximum. If there is no railing, at least one clear space must be provided on a pier or platform.

[iii] Fishing piers and platforms must have at least one turning area, either 60-inch turning space or a T-shaped space to allow a person using a mobility device or wheelchair to make a 180-degree turn.

[iv] Gangways are not required to have to have landings at the end, if transition plates are provided. If the slope of the transition plate is greater that 1: 20 (5%), the transition plates must have a landing at the end of the transition plate not connected to the gangway and must comply with other ramp requirements.

ADA Compliance Program

MEDFORD PARKS AND RECREATION DEPARTMENT

ADA ACCESSIBILITY SURVEY FOR PARK FACILITIES

Date: **March 3, 2016** **Estimated Cost:**

Facility: **Union Park** **Department Notified:**

Survey by: **Jean Akers** **Date of Notification:**

Check all applicable building codes and ADAAG publications prior to any renovation or construction. This survey is only a guideline.

ITEM				RECOMMENDATIONS
Accessible Routes[1]	**n/a**	**Yes**	**No**	**Accessible Routes**
☐ Check here if section does not apply to this park and move to next section.				
1. Does the park have accessible routes to all accessible facilities within the park?	☐	☐	☒	☐ Expand existing accessible routes as needed ☐ Construct accessible routes ☒ Note: **Access to community garden is only accessible amenity.**
2. Where court sports are provided (i.e. tennis, basketball, and volleyball) are there accessible routes to each court? (Routes must connect both sides of the court)	☒	☐	☐	☐ Expand existing accessible routes as needed ☐ Construct accessible routes ☐ Note:
3. Are there accessible routes to any and all animal containment areas?	☒	☐	☐	☐ Expand existing accessible routes as needed ☐ Construct accessible routes ☐ Note:
4. Are there detectable warnings anywhere a route crosses a traffic way?	☐	☐	☒	☐ Repair as needed ☒ Note: **Missing at East and North access**.
ITEM				**RECOMMENDATIONS**
Parking and Drop-off Areas	**n/a**	**Yes**	**No**	**Parking and Drop-off Areas**
☐ Check here if section does not apply to this park and move to next section.				
5. Are an adequate number of accessible parking spaces available? The table below gives the ADAAG requirement for new construction and alterations (for lots with more than 100 spaces refer to ADAAG). Accessible Spaces per Overall spaces	☐	☒	☐	☐ Reconfigure a reasonable number of spaces by repainting stripes. ☐ Construct accessible routes ☐ Note: **7 at south end; 3 at cul-de-sac.**

Total Spaces	Accessible Spaces Required
10 spaces	**1 van-accessible**
1 to 25	1 space
26 to 50	2 spaces
51 to 75	3 spaces

[1] Accessible routes must comply with ADAAG provisions for the location, width (minimum 36 inches) passing space, head room, surface, slope (Maximum 1:12 (or 8.33%). Accessible routes must connect all accessible elements within the facility. Accessible routes must be stable, firm and slip resistant. There is no requirement to change the surface of a playing field to an accessible surface.

76 to 100	4 spaces				
6. Are an adequate number of van accessible spaces provided? At least 1 of every 8 accessible spaces must be van-accessible (with a minimum of 1 van-accessible space in all cases.)		☐	☒	☐	☐ Reconfigure to provide van-accessible space(s).
7. Are the access aisles part of the accessible route?		☐	☒	☐	☐ Add curb ramps. ☐ Reconstruct sidewalk
8. Are the accessible spaces closest to the accessible entrance?		☐	☒	☐	☐ Reconfigure spaces.
9. Are accessible spaces marked with and International Symbol of Accessibility? **Yes** Are there signs reading "Van Accessible" at van spaces? **No**		☐	☐	☒	☐ Add signs, placed so that they are not obstructed by cars. **Raise sign higher**
10. Is there an enforcement procedure to ensure that accessible parking is used only by those who need it?		☒	☐	☐	☐ Implement a policy to check periodically for violators and report them to the proper authorities.
Team Player Seating Areas		**n/a**	**Yes**	**No**	**Team Player Seating Areas**
☒ Check here if section does not apply to this park and move to next section.					
11. Do fixed team or player seating areas contain the required number of wheelchair spaces and companion seats required by ADAAG?		☐	☐	☐	☐ Renovate as needed ☐ Install accessible seating area ☐ Note
Restrooms		**n/a**	**Yes**	**No**	**Restrooms**
☒ Check here if section does not apply to this park and move to next section. **Closed for season**					
12. If rest rooms are available to the public, is at least one rest room (either one for each sex, or unisex) fully accessible?		☐	☐	☐	☐ Reconfigure rest room. ☐ Combine rest rooms to create one unisex accessible rest room. ☐ Note:
13. Are there signs at inaccessible rest rooms that give directions to accessible ones?		☐	☐	☐	☐ Install accessible signs. ☐ Note:
14. Is there tactile signage identifying rest rooms? *Note: Mount signs on the wall, on the latch side of the door, complying with the permanent signage.*		☐	☐	☐	☐ Add accessible signage, placed to the side of the door, 60 inches to centerline (not on the door itself). ☐ If symbols are used, add supplementary verbal signage. ☐ Note:
15. Are pictograms or symbols used to identify rest rooms, and, if used, are raised characters and braille included below?		☐	☐	☐	☐ If symbols are used, add supplementary verbal signage with raised characters and braille below pictogram symbol. ☐ Note:
16. Is the doorway at least 32 inches clear?		☐	☐	☐	☐ Install offset (swing-clear) hinges. ☐ Widen the doorway. ☐ Note:
17. Are doors equipped with accessible handles (operable with a closed fist), 48 inches high or less?		☐	☐	☐	☐ Lower handles. ☐ Replace knobs or latches with lever or loop handles. ☐ Add lever extensions. ☐ Install power-assisted or automatic door openers. ☐ Note:

18. Can doors be opened easily (5 lbf maximum force)?	☐	☐	☐	☐ Adjust or replace closers. ☐ Install lighter doors. ☐ Install power-assisted or automatic door openers. ☐ Note:
19. Does the entry configuration provide adequate maneuvering space for a person using a wheelchair? *Note: A person using a wheelchair needs 36 inches of clear width for forward movement, and a 5-foot diameter clear space or a T-shaped space to make turns. A minimum distance of 48 inches clear of the door swing is needed between the two doors of an entry vestibule.*	☐	☐	☐	☐ Rearrange furnishings such as chairs and trash cans. ☐ Remove inner door if there is a vestibule with two doors. ☐ Move or remove obstructing partitions. ☐ Note:
20. Is there a 36-inch-wide path to all fixtures?	☐	☐	☐	☐ Remove obstructions. ☐ Note:
21. Is the stall door operable with a closed fist, inside and out?	☐	☐	☐	☐ Replace inaccessible knobs with lever or loop handles. ☐ Add lever extensions. ☐ Note:
22. Is there a wheelchair-accessible stall that has an area of at least 5 feet by 5 feet, clear of the door swing, OR is there a stall that is less accessible but that provides greater access than a typical stall (either 36 by 69 inches or 48 by 69 inches)?	☐	☐	☐	☐ Move or remove partitions. ☐ Reverse the door swing if it is safe to do so. ☐ Note:
23. In the accessible stall, are there grab bars behind and on the side wall nearest to the toilet?	☐	☐	☐	☐ Add grab bars. ☐ Note:
24. Is the toilet seat 17 to 19 inches high?	☐	☐	☐	☐ Add raised seat. ☐ Note:
25. Does one lavatory have a 30-inch-wide by 48-inch-deep clear space in front? *Note: A maximum of 19 inches of the required depth may be under the lavatory.*	☐	☐	☐	☐ Rearrange furnishings. ☐ Replace lavatory. ☐ Remove or alter cabinetry to provide space underneath. Make sure hot pipes are covered. ☐ Move a partition or wall. ☐ Note:
26. Is the lavatory rim no higher than 34 inches?	☐	☐	☐	☐ Adjust or replace lavatory. ☐ Note:
27. Is there at least 29 inches from the floor to the bottom of the lavatory apron? (Excluding pipes)?	☐	☐	☐	☐ Adjust or replace lavatory. ☐ Note:
28. Can the faucet be operated with one closed fist?	☐	☐	☐	☐ Replace faucet handles with paddle type. ☐ Note:
29. Are soap and other dispensers and hand dryers within reach ranges (see page 7) and usable with one closed fist?	☐	☐	☐	☐ Lower dispensers. ☐ Replace with or provide additional accessible dispensers. ☐ Note:
30. Is the mirror mounted with the bottom edge of the reflecting surface 40 inches high or lower?	☐	☐	☐	☐ Lower or tilt down the mirror. ☐ Add a larger mirror anywhere in the room. ☐ Note:

Pit Toilets	n/a	Yes	No	Pit Toilets
31.				
☒ Check here if section does not apply to this park and move to next section.				
32. Is there a clear space of 60 inches by 60 inches adjacent to the toilet?	☐	☐	☐	☐ Repair as needed ☐ Note:
33. Does the height of the pit toilet riser comply with ADAAG 4.16.3?	☐	☐	☐	☐ Repair as needed ☐ Note:
34. Is the maneuvering space less than or equal to 1:50? (1:33 maximum allowed for drainage)	☐	☐	☐	☐ Repair as needed ☐ Note:
35. If the pit toilet has walls, are grab bars installed consistent with ADAAG 4.16.4?	☐	☐	☐	☐ Repair as needed ☐ Note:
36. Is the surface adjacent to the pit toilet firm and stable?	☐	☐	☐	☐ Repair as needed ☐ Note:
Utilities	**n/a**	**Yes**	**No**	**Utilities**
☒ Check here if section does not apply to this park and move to next section.				
37. Is the maneuvering space less than or equal to 1:50? (1:33 maximum allowed for drainage)	☐	☐	☐	☐ Repair as needed ☐ Note:
38. Is the surface adjacent to the utility firm and stable?	☐	☐	☐	☐ Repair as needed ☐ Note:
39. Are fixed water spouts located 28 inches minimum to 36 inches maximum above the ground or floor space?	☐	☐	☐	☐ Repair as needed ☐ Note:
40. Is the maneuvering space less than or equal to 1:50? (1:33 maximum allowed for drainage)	☐	☐	☐	☐ Repair as needed ☐ Note:
Drinking Fountains	**n/a**	**Yes**	**No**	**Drinking Fountains**
☐ Check here if section does not apply to this park and move to next section.				
41. Is there at least one fountain with clear floor space of at least 30 by 48 inches in front?	☐	☒	☐	☐ Clear more room by rearranging or removing furnishings. ☐ Note:
42. Is there one fountain with its spout no higher than 36 inches from the ground, and another with a standard height spout (or a single "hi-lo" fountain)?	☐	☐	☒	☐ Provide cup dispensers for fountains with spouts that are too high. ☐ Provide accessible water cooler. ☒ Note: **40" ht.**
43. Are controls mounted on the front or on the side near the front edge, and operable with one closed fist?	☐	☒	☐	☐ Replace the controls. ☐ Note:
44. Is each water fountain cane-detectable (located within 27 inches off the floor or protruding less than 4 inches from the wall, into the circulation path?	☐	☐	☒	☐ Place a planter or other cane-detectable barrier on each side at floor level. ☒ Note: **29.5" clearance**
Telephones	**n/a**	**Yes**	**No**	**Telephones**
☒ Check here if section does not apply to this park and move to next section.				
45. If pay or public use phones are provided, is there clear floor space of at least 30 by 48 inches in front of at least one?	☐	☐	☐	☐ Move furnishings. ☐ Replace booth with open station. ☐ Note:
46. Is the highest operable part of the phone no higher than 48 inches (up to 54 inches if a side approach is possible)?	☐	☐	☐	☐ Lower telephone. ☐ Note:

47. Does the phone protrude no more than 4 inches into the circulation space?	☐	☐	☐	☐ Place a cane-detectable barrier on each side at floor level. ☐ Note:
48. Does the phone have push-button controls?	☐	☐	☐	☐ Contact phone company to install push-buttons. ☐ Note:
49. Is the phone hearing-aid compatible?	☐	☐	☐	☐ Contact phone company to replace with hearing-aid compatible phone. ☐ Note:
50. Is the phone adapted with volume control?	☐	☐	☐	☐ Contact the phone company to add volume control. ☐ Note:
51. Is the phone with volume control identified with appropriate signage?	☐	☐	☐	☐ Add signage. ☐ Note:
52. If there are four or more public phones in the building, is one of the phones equipped with a text telephone (TT or TDD)?	☐	☐	☐	☐ Install a text telephone. ☐ Have a portable text telephone available. ☐ Provide a shelf and outlet next to phone. ☐ Note:
53. Is the location of the text telephone identified by accessible signage bearing the International TDD Symbol?	☐	☐	☐	☐ Add signage. ☐ Note:

Directional and Informational Signage	**n/a**	**Yes**	**No**	**Directional and Informational Signage**
☐ Check here if section does not apply to this park and move to next section.				
54. If mounted about 80 inches, do they have letters at least 3 inches high, with high contrast, and non-glare finish?	☐	☐	☒	☒ Review requirements and replace signs as needed, meeting the requirements for character size, contrast, and finish. ☐ Note:
55. Do directional and informational signs comply with legibility requirements? 56. (Building directories or temporary signs need not comply.)	☐	☐	☒	☒ Review requirements and replace signs as needed, meeting the requirements for character size, contrast, and finish. ☐ Note:
Seats, Tables and Counters	**n/a**	**Yes**	**No**	**Seats, Tables and Counters**
☐ Check here if section does not apply to this park and move to next section.				
50. Are the spaces for wheelchair seating distributed throughout? (Cover or uncovered gathering areas, bleachers)	☐	☐	☒	☐ Rearrange tables to allow room for wheelchairs in seating areas throughout the area. ☐ Remove some fixed seating. ☐ Note:
51. If picnic tables are provided, are at least 50% and no less than two of the tables, accessible?	☐	☐	☒	☒ Replace as needed ☐ Note: **5 tables – none with W/C space**
52. Are knee spaces at accessible picnic tables at least 27 inches high, 30 inches wide, and 19 inches deep?	☐	☐	☒	☒ Replace or raise tables. ☐ Note:
53. Are picnic tables spaced such that all areas of the table are accessible?	☐	☐	☒	☒ Rearrange tables to allow room for wheelchairs in seating areas throughout the area. ☐ Remove some fixed seating. ☐ Note:
54. At each type of cashier counter, is there a portion of the main counter that is no	☒	☐	☐	☐ Provide a lower auxiliary counter or folding shelf.

more than 36 inches high?				☐ Arrange the counter and surrounding furnishings to create a space to hand items back and forth. ☐ Note:
55. Is there a portion of food-ordering counters that is no more than 36 inches high, or is there space at the side for passing items to customers who have difficulty reaching over a high counter?	☒	☐	☐	☐ Lower section of counter. ☐ Arrange the counter and surrounding furnishings to create a space to pass items. ☐ Note:
Fire Rings	**n/a**	**Yes**	**No**	**Fire Rings**
☒ Check here if section does not apply to this park and move to next section.				
56. Do all fire rings have a clear space extending a minimum 48" deep by 48" wide at all usable portions of the ring?	☐	☐	☐	☐ Install clear spaces as needed ☐ Note:
57. Are the clear spaces around the fire pit on a firm and stable surface?	☐	☐	☐	☐ Correct as needed ☐ Note:
58. Is the fire surface height a minimum of 9" above the ground/floor?	☐	☐	☐	☐ Construct or renovate pits to meet clearances ☐ Note:
59. Are the slopes around fire pits not more than 1:50?	☐	☐	☐	☐ Construct or renovate pits to meet clearances ☐ Note:
Cooking Surfaces, Grills, Pedestal Grills[2]	**n/a**	**Yes**	**No**	**Cooking Surfaces, Grills, Pedestal Grills**
☒ Check here if section does not apply to this park and move to next section.				
60. Are accessible cooking features dispersed throughout the area and among the types provided?	☐	☐	☐	☐ Evenly disperse cooking features ☐ Note:
61. Are accessible cooking feature surfaces installed between 15 inches and 34 inches above the ground/floor?	☐	☐	☐	☐ Install as required ☐ Note:
62. Do operating controls and mechanisms comply with current ADAAG 4.27.1 (General) 4.27.2 (Clear Floor Space and 4.27.3 (Height)?	☐	☐	☐	☐ Install as required ☐ Note:
Fixed Trash/Recycling Containers	**n/a**	**Yes**	**No**	**Fixed Trash/Recycling Containers**
☒ Check here if section does not apply to this park and move to next section.				
63. Are trash and recycling containers accessible and do they comply with ADAAG 4.27?	☐	☐	☐	☐ Replace as needed ☐ Note:
Overlooks/Viewing Areas	**n/a**	**Yes**	**No**	**Overlooks/Viewing Areas**
☒ Check here if section does not apply to this park and move to next section.				
64. Are all viewing areas on an accessible route?	☐	☐	☐	☐ Install accessible paths as needed ☐ Note:
65. Are all viewing areas constructed to provide an unobstructed view?	☐	☐	☐	☐ Repair as needed ☐ Note:
66. Is there at least one maneuvering space that complies with ADAAG 4.2.3?	☐	☐	☐	☐ Repair as needed ☐ Note:

[2] Where there is only one cooking surface, grill or pedestal grill in a provided picnic area, it shall be accessible. Where multiple cooking features are provided in a picnic area, 50 percent, but no less than 2 shall be accessible.

67. Is the ground surface firm and stable?	☐	☐	☐	☐ Repair as needed ☐ Note:
68. Is the maneuvering space less than or equal to 1:50? (1:33 maximum allowed for drainage)	☐	☐	☐	☐ Repair as needed ☐ Note:
Telescopes/Periscopes	**n/a**	**Yes**	**No**	**Telescopes/Periscopes**
☒ Check here if section does not apply to this park and move to next section.				
69. Are at least 20%, but not less than one, telescope or periscope that complies with ADAAG 4.27?	☐	☐	☐	☐ Repair as needed ☐ Note:
70. Are the eye pieces usable from a seated position?	☐	☐	☐	☐ Repair as needed ☐ Note:
71. Is the ground surface firm and stable?	☐	☐	☐	☐ Repair as needed ☐ Note:
72. Is the maneuvering space less than or equal to 1:50? (1:33 maximum allowed for drainage)	☐	☐	☐	☐ Repair as needed ☐ Note:
Benches	**n/a**	**Yes**	**No**	**Benches**
☐ Check here if section does not apply to this park and move to next section.				
73. Where multiple benches are provided, are at least 50% consistent with this section?	☐	☐	☒	☐ Repair as needed ☐ Note: **5 benches**
74. Are accessible benches dispersed evenly throughout the park?	☐	☐	☒	☒ Disperse benches evenly throughout the park ☐ Note: just at play area
75. Of the accessible benches that are provided, do at least 50% of those benches have armrests consistent with ADAAG 4.26.3?	☐	☐	☒	☐ Repair as needed ☐ Note:
76. Are the front edges of accessible benches between 17 and 19 inches maximum above the ground/floor?	☐	☐	☒	☐ Repair as needed ☐ Note: **Varies**
77. Are floor spaces adjacent to benches consistent with ADAAG 4.2.4?	☐	☐	☒	☐ Repair as needed ☐ Note:
78. Is the ground/floor surface around the accessible benches firm and stable?	☐	☐	☒	☐ Repair as needed ☐ Note: **in grass or bark chips**
79. Do all accessible benches have back support the full length of the bench?	☐	☒	☐	☐ Repair as needed ☐ Note:
Playground Equipment Accessibility	**n/a**	**Yes**	**No**	**Playground Equipment Accessibility**
☐ Check here if section does not apply to this park and move to next section.				
80. Is there at least one of each play component on an accessible route[3]?	☐	☐	☒	☐ Expand existing accessible routes as needed ☐ Construct accessible routes ☐ Note: bark surface
81. Is there at least one of each ground-level play component on an accessible route?	☐	☐	☒	☐ Expand existing accessible routes as needed ☐ Construct accessible routes ☐ Note:
82. Are the play components integrated for	☐	☐	☒	☐ Ensure play components on accessible

[3] Different types of play components are based on the general experience provided by the play component. Different types include, but are no limited to, rocking, swinging, climbing, spinning and sliding. Components may be elevated or at or below ground level.

use by all children; including those with disabilities?				routes can be used by all children ☐ Note:
Trails	**n/a**	**Yes**	**No**	**Trails**
☐ Check here if section does not apply to this park and move to next section.				
83. Is the clear width of the trail 36 inches?	☐	☐	☒	☐ Renovate as required ☐ Construct all new trails to code ☒ Note: **Narrowed by bollards**
84. Are openings in the trail less than ½ inch? *Note: (Board slat spaces, etc. – Elongated openings should be placed so that the long dimension is perpendicular or diagonal to the dominate direction of travel.)*	☐	☒	☐	☐ Renovate as required ☐ Construct all new trails to code ☐ Note:
85. Is the trail free of constructed or natural barriers?	☐	☐	☒	☐ Remove as needed ☒ Note: **Bollards create barrier**
86. Are all overhead hazards maintained at a height that is sufficient for all expected users of the trail? (Remember, Objects that protrude into a pathway at a height greater than 27" are difficult for the blind or persons with visual disabilities who use canes to detect.)	☐	☒	☐	☐ Renovate as required ☐ Construct all new trails to code ☐ Note:
87. Is there a segment in the trail that has a 10% grade for more than 30 feet?	☐	☐	☒	☐ Construct level rest interval[4] ☐ Note:
88. Are all cross slopes a maximum of 3%?	☐	☒	☐	☐ Renovate as required ☐ Construct all new trails to code ☐ Note:
89. Are all tread obstacles a maximum of 1"?	☐	☒	☐	☐ Renovate as required ☐ Construct all new trails to code ☐ Note:
90. Are passing spaces (6" x 60") provided at maximum intervals of 200 ft. whenever the clear tread width is less then 60"?	☒	☐	☐	☐ Renovate as required ☐ Construct all new trails to code ☐ Note:
91. Does the trail have or require edge protection?	☐	☐	☒	☐ Renovate as required – Where provided, edge protection should be a minimum of 3". ☐ Construct all new trails to code ☐ Note:
92. Does the trail have signs that clearly indicate the type of use, rules and difficult conditions for the trail?	☐	☐	☒	☐ Renovate as required ☐ Construct all new trails to code ☐ Note:
93. Are there signs that warn users that changes in trail level or tread obstacles could not be removed?	☐	☐	☒	☐ Renovate as required ☐ Construct all new trails to code ☐ Note:
94. Are there detectable warnings anywhere a route crosses a traffic way?	☐	☐	☒	☐ Repair as needed ☐ Note:
Shooting Facilities	**n/a**	**Yes**	**No**	**Shooting Facilities**
☒ Check here if section does not apply to this park and move to next section.				
95. Does the English Pit range have 60-inch diameter space with slopes not steeper	☐	☐	☐	☐ Renovate as needed ☐ Install accessible seating area

[4] Resting intervals must be 60" minimum on length and at least as wide as the widest portion of the trail segment leading to the resting interval with a cross slope that does not exceed 3%.

than 1:48 so a wheelchair can turn around?				☐ Note
96. Do the firing benches have a wheelchair accessible area with a bench between 27 and 34 inches with a minimum of 19" leg space?	☐	☐	☐	☐ Renovate as needed ☐ Install accessible seating area ☐ Note
97. If fixed firing positions are provided, at least 5% but not less than one of each type of firing position, must be served by an accessible route. Does English Pit have an accessible route?	☐	☐	☐	☐ Renovate as needed ☐ Install accessible route ☐ Note
98. Does the park have accessible routes to all target impact areas?	☐	☐	☐	☐ Expand existing accessible routes as needed ☐ Construct accessible routes ☐ Note:
Aquatic Recreation Facilities	**n/a**	**Yes**	**No**	**Aquatic Recreation Facilities**
☒ Check here if section does not apply to this park and move to next section.				
99. Is there an accessible route (36" wide) over beach areas that allow access to the water's edge?	☐	☐	☐	☐ Renovate as needed ☐ Install accessible route ☐ Note
100. Are there accessible routes with handrails that lead into designated swim areas such as ponds, lakes, etc.	☐	☐	☐	☐ Renovate as needed ☐ Install accessible route ☐ Note
Fishing piers and Platforms	**n/a**	**Yes**	**No**	**Fishing piers and Platforms**
☒ Check here if section does not apply to this park and move to next section.				
101. Does this park have a facility specifically designed and constructed for fishing?	☐	☐	☐	(Structures that were not built specifically for fishing do not need to meet ADAAG guidelines. Structures designed as fishing piers or platforms, must have an accessible route.)
102. Does the park have a gangway serving the fishing pier or platform?	☐	☐	☐	☐ Install a gangway platform – Gangway 1:12 maximum slope or at least 30 feet long. ☐ Renovate existing platform to meet code (Check specific building codes) ☐ Note
103. Does the gangway have a transition plate to the pier or platform that meets code?	☐	☐	☐	☐ Install a transition plate[5] ☐ Adjust existing transition plate to meet code ☐ Note
104. Does the gangway have handrails?	☐	☐	☐	☐ Install handrail to meet code ☐ Ensure existing rails meet code ☐ Note
105. Does the fishing pier or platform have railings, guards or handrails[6]?	☐	☐	☐	☐ Install as needed ☐ Renovate existing structure to meet code ☐ Note

[5] Gangways are not required to have to have landings at the end, if transition plates are provided. If the slope of the transition plate is greater that 1: 20 (5%), the transition plates must have a landing at the end of the transition plate not connected to the gangway and must comply with other ramp requirements.

[6] Where railings, guards or handrails are provided on a fishing pier or platform, at least 25 % of the rails must be 34 inches or less in height above the ground or dock so accommodate a person in a wheelchair. These railings must be dispersed as equally as possible to all areas of the fishing pier.

106. Does the fishing pier or platform have edge protection[i]?	☐	☐	☐	☐ Install ☐ Renovate existing edge protection ☐ Note
107. Does the fishing pier or platform have clear floor or ground space[ii]?	☐	☐	☐	☐ Install ☐ Renovate existing edge protection ☐ Note
108. Does the fishing pier or platform have sufficient turning space[iii]?	☐	☐	☐	☐ Install ☐ Renovate existing edge protection ☐ Note
Boating Facilities	**n/a**	**Yes**	**No**	**Boating Facilities**
☒ Check here if section does not apply to this park and move to next section.				
109. Is there an accessible route to the boating facilities?	☐	☐	☐	☐ Install ☐ Renovate existing route ☐ Note
110. Does the gangway to the dock or floating dock deigned to provide for a maximum 1:12 (8.33%) slope ? *Note: Not required to be longer than 80 feet. (Elevators may be used in lieu of gangways) In smaller facilities with less than 25 boat slips, the slope of the gangway may exceed 1:12, if the gangway is at least 30 feet long.*	☐	☐	☐	☐ Install ☐ Renovate existing route ☐ Note
111. Does the gangway have a transition plate to the pier or platform that meets code[iv]?	☐	☐	☐	☐ Install a transition plate ☐ Adjust existing transition plate to meet code ☐ Note

<table>
<tr>
<td>112. Where boat slips[7] are provided, does the number of accessible slips[8] comply with the table to the right?
Note: If boat slips at a facility are not identified or demarcated by length, each 40 feet of boat slip edge along the perimeter of a pier will be counted as one boat slip</td>
<td>☐</td>
<td>☐</td>
<td>☐</td>
<td>
<table>
<tr><th colspan="2">Number of Accessible Boat Slips Required</th></tr>
<tr><td>Total Slips in Facility</td><td>Minimum Accessible Slips</td></tr>
<tr><td>1-25</td><td>1</td></tr>
<tr><td>26-50</td><td>2</td></tr>
<tr><td>50-100</td><td>3</td></tr>
<tr><td>101-150</td><td>4</td></tr>
</table>
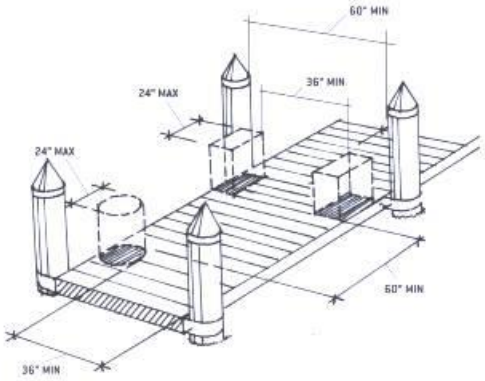

PIER CLEARANCE SPACE REDUCTION
</td>
</tr>
<tr>
<td>If the facility only has a boarding pier (see footnote # 9) at least 5% but not less than, must comply with these guidelines. The entire length of accessible boarding piers must comply with the same provisions that apply to slips.

113. Does this facility meet this regulation?</td>
<td>☐</td>
<td>☐</td>
<td>☐</td>
<td>☐ Install
☐ Renovate boarding pier
☐ Note</td>
</tr>
<tr>
<td>114. Is this facility compromised only of a boat launch with no boarding ramp or pier?</td>
<td>☐</td>
<td>☐</td>
<td>☐</td>
<td>If yes, there are no specific provisions that address access to launch ramps without boarding piers.</td>
</tr>
</table>

[7] A boat slip is the portion of a pier, main pier, finger pier, or float where a boat is berthed or moored, or used for embarking or disembarking. Boarding piers that are not part of a boat launch ramp are classified as “boat slips” for the purpose of this survey.

[8] Accessible boat slips must have clear pier space at least 60 inches wide and as long as the slip. Every 10 feet of linear pier edge serving the accessible slips must have at least one continuous clear opening that is at least 60 inches wide. The width of the clear pier space may be 36 inches wide for a length of 24 inches, as long as multiple 36-inch segments are separated by segments that are 60 inches minimum clear in width and 60 inches minimum clear in length, and the clear openings are at least 60 inches deep. Edge protection is not required

Item Number	Notes
	Missing detectible warning strips
	H/C van accessible space should have access location re-aligned to connect directly with trail.
	Bollards in center of trail reduce the width to 29" and 32".
	No accessible routes to any play areas due to retining border for wood chips.
	Benches in bark mulch have heights varying from 15"-20" front edges.

4.2.3* Wheelchair Turning Space. The space required for a wheelchair to make a 180-degree turn is a clear space of 60 in (1525 mm) diameter (see Fig. 3(a)) or a T-shaped space (see Fig. 3(b)). Appendix Note

4.2.4* Clear Floor or Ground Space for Wheelchairs.

4.2.4.1 Size and Approach. The minimum clear floor or ground space required to accommodate a single, stationary wheelchair and occupant is 30 in by 48 in (760 mm by 1220 mm) (see Fig. 4(a)). The minimum clear floor or ground space for wheelchairs may be positioned for forward or parallel approach to an object (see Fig. 4(b) and (c)). Clear floor or ground space for wheelchairs may be part of the knee space required under some objects.

4.2.4.2 Relationship of Maneuvering Clearance to Wheelchair Spaces. One full unobstructed side of the clear floor or ground space for a wheelchair shall adjoin or overlap an accessible route or adjoin another wheelchair clear floor space. If a clear

floor space is located in an alcove or otherwise confined on all or part of three sides, additional maneuvering clearances shall be provided as shown in Fig. 4(d) and (e).

4.2.4.3 Surfaces for Wheelchair Spaces. Clear floor or ground spaces for wheelchairs shall comply with 4.5. Appendix Note

4.16.3* Height. The height of water closets shall be 17 in to 19 in (430 mm to 485 mm), measured to the top of the toilet seat (see Fig. 29(b)). Seats shall not be sprung to return to a lifted position. Appendix Note

4.16.4* Grab Bars. Grab bars for water closets not located in stalls shall comply with 4.26 and Fig. 29. The grab bar behind the water closet shall be 36 in (915 mm) minimum. Appendix Note

4.26.3 Structural Strength. The structural strength of grab bars, tub and shower seats, fasteners, and mounting devices shall meet the following specification:

(1) Bending stress in a grab bar or seat induced by the maximum bending moment from the application of 250 lbf (1112N) shall be less than the allowable stress for the material of the grab bar or seat.

(2) Shear stress induced in a grab bar or seat by the application of 250 lbf (1112N) shall be less than the allowable shear stress for the material of the grab bar or seat. If the connection between the grab bar or seat and its mounting bracket or other support is considered to be fully restrained, then direct and torsional shear stresses shall be totaled for the combined shear stress, which shall not exceed the allowable shear stress.

(3) Shear force induced in a fastener or mounting device from the application of 250 lbf (1112N) shall be less than the allowable lateral load of either the fastener or mounting device or the supporting structure, whichever is the smaller allowable load.

(4) Tensile force induced in a fastener by a direct tension force of 250 lbf (1112N) plus the maximum moment from the application of 250 lbf (1112N) shall be less than the allowable withdrawal load between the fastener and the supporting structure.

(5) Grab bars shall not rotate within their fittings.

4.27 Controls and Operating Mechanisms.

4.27.1 General. Controls and operating mechanisms required to be accessible by 4.1 shall comply with 4.27.

4.27.2 Clear Floor Space. Clear floor space complying with 4.2.4 that allows a forward or a parallel approach by a person using a wheelchair shall be provided at controls, dispensers, receptacles, and other operable equipment.

4.27.3* Height. The highest operable part of controls, dispensers, receptacles, and other operable equipment shall be placed within at least one of the reach ranges

specified in 4.2.5 and 4.2.6. Electrical and communications system receptacles on walls shall be mounted no less than 15 in (380 mm) above the floor. Appendix Note

> EXCEPTION: These requirements do not apply where the use of special equipment dictates otherwise or where electrical and communications systems receptacles are not normally intended for use by building occupants.

4.27.4 Operation. Controls and operating mechanisms shall be operable with one hand and shall not require tight grasping, pinching, or twisting of the wrist. The force required to activate controls shall be no greater than 5 lbf (22.2 N).

---

[i] Where railings, guards or handrails are provided, edge protection must be provided and extended a minimum of 2 inches above the ground or deck surface. Edge protection is not required where a railing, guardrail or handrail is provided, if the deck surface extends a minimum of 12 inches beyond the inside face of the railing.

[ii] At least one clear floor or ground space (30 inches by 48 inches) must be provided at each location that has a railing height of 34 inches maximum. If there is no railing, at least one clear space must be provided on a pier or platform.

[iii] Fishing piers and platforms must have at least one turning area, either 60-inch turning space or a T-shaped space to allow a person using a mobility device or wheelchair to make a 180-degree turn.

[iv] Gangways are not required to have to have landings at the end, if transition plates are provided. If the slope of the transition plate is greater that 1: 20 (5%), the transition plates must have a landing at the end of the transition plate not connected to the gangway and must comply with other ramp requirements.

ADA Compliance Program

MEDFORD PARKS AND RECREATION DEPARTMENT

ADA ACCESSIBILITY SURVEY FOR PARK FACILITIES

Date: March 3, 2016 **Estimated Cost:**

Facility: US Cellular Park **Department Notified:**

Survey by: Jean Akers **Date of Notification:**

Check all applicable building codes and ADAAG publications prior to any renovation or construction. This survey is only a guideline.

ITEM				RECOMMENDATIONS
Accessible Routes[1]	**n/a**	**Yes**	**No**	**Accessible Routes**
☐ Check here if section does not apply to this park and move to next section.				
1. Does the park have accessible routes to all accessible facilities within the park?	☐	☒	☐	☐ Expand existing accessible routes as needed ☐ Construct accessible routes ☐ Note:
2. Where court sports are provided (i.e. tennis, basketball, and volleyball) are there accessible routes to each court? (Routes must connect both sides of the court)	☐	☒	☐	☐ Expand existing accessible routes as needed ☐ Construct accessible routes ☐ Note:
3. Are there accessible routes to any and all animal containment areas?	☒	☐	☐	☐ Expand existing accessible routes as needed ☐ Construct accessible routes ☐ Note:
4. Are there detectable warnings anywhere a route crosses a traffic way?	☐	☒	☐	☐ Repair as needed ☐ Note:
ITEM				**RECOMMENDATIONS**
Parking and Drop-off Areas	**n/a**	**Yes**	**No**	**Parking and Drop-off Areas**
☐ Check here if section does not apply to this park and move to next section.				
5. Are an adequate number of accessible parking spaces available? The table below gives the ADAAG requirement for new construction and alterations (for lots with more than 100 spaces refer to ADAAG). Accessible Spaces per Overall spaces Total Spaces — Accessible Spaces Required 1 to 25 — 1 space 26 to 50 — 2 spaces 51 to 75 — 3 spaces 76 to 100 — 4 spaces	☐	☒	☐	☐ Reconfigure a reasonable number of spaces by repainting stripes. ☐ Construct accessible routes ☒ Note: **Check master plan or development plan for parking counts**

[1] Accessible routes must comply with ADAAG provisions for the location, width (minimum 36 inches) passing space, head room, surface, slope (Maximum 1:12 (or 8.33%). Accessible routes must connect all accessible elements within the facility. Accessible routes must be stable, firm and slip resistant. There is no requirement to change the surface of a playing field to an accessible surface.

6. Are an adequate number of van accessible spaces provided? At least 1 of every 8 accessible spaces must be van-accessible (with a minimum of 1 van-accessible space in all cases.)	☐	☐	☐	☐ Reconfigure to provide van-accessible space(s).
7. Are the access aisles part of the accessible route?	☐	☐	☐	☐ Add curb ramps. ☐ Reconstruct sidewalk
8. Are the accessible spaces closest to the accessible entrance?	☐	☐	☐	☐ Reconfigure spaces.
9. Are accessible spaces marked with and International Symbol of Accessibility? Are there signs reading "Van Accessible" at van spaces?	☐	☐	☐	☐ Add signs, placed so that they are not obstructed by cars.
10. Is there an enforcement procedure to ensure that accessible parking is used only by those who need it?	☐	☐	☐	☐ Implement a policy to check periodically for violators and report them to the proper authorities.
Team Player Seating Areas	**n/a**	**Yes**	**No**	**Team Player Seating Areas**
☐ Check here if section does not apply to this park and move to next section.				
11. Do fixed team or player seating areas contain the required number of wheelchair spaces and companion seats required by ADAAG?	☐	☒	☐	☐ Renovate as needed ☐ Install accessible seating area ☐ Note
Restrooms	**n/a**	**Yes**	**No**	**Restrooms**
☐ Check here if section does not apply to this park and move to next section.				
12. If rest rooms are available to the public, is at least one rest room (either one for each sex, or unisex) fully accessible?	☐	☒	☐	☐ Reconfigure rest room. ☐ Combine rest rooms to create one unisex accessible rest room. ☐ Note:
13. Are there signs at inaccessible rest rooms that give directions to accessible ones?	☒	☐	☐	☐ Install accessible signs. ☐ Note:
14. Is there tactile signage identifying rest rooms? *Note: Mount signs on the wall, on the latch side of the door, complying with the permanent signage.*	☐	☒	☐	☐ Add accessible signage, placed to the side of the door, 60 inches to centerline (not on the door itself). ☐ If symbols are used, add supplementary verbal signage. ☐ Note:
15. Are pictograms or symbols used to identify rest rooms, and, if used, are raised characters and braille included below?	☐	☒	☐	☐ If symbols are used, add supplementary verbal signage with raised characters and braille below pictogram symbol. ☐ Note:
16. Is the doorway at least 32 inches clear?	☐	☒	☐	☐ Install offset (swing-clear) hinges. ☐ Widen the doorway. ☐ Note:
17. Are doors equipped with accessible handles (operable with a closed fist), 48 inches high or less?	☐	☒	☐	☐ Lower handles. ☐ Replace knobs or latches with lever or loop handles. ☐ Add lever extensions. ☐ Install power-assisted or automatic door openers. ☐ Note:

18. Can doors be opened easily (5 lbf maximum force)?	☐	☒	☐	☐ Adjust or replace closers. ☐ Install lighter doors. ☐ Install power-assisted or automatic door openers. ☐ Note:
19. Does the entry configuration provide adequate maneuvering space for a person using a wheelchair? *Note: A person using a wheelchair needs 36 inches of clear width for forward movement, and a 5-foot diameter clear space or a T-shaped space to make turns. A minimum distance of 48 inches clear of the door swing is needed between the two doors of an entry vestibule.*	☐	☒	☐	☐ Rearrange furnishings such as chairs and trash cans. ☐ Remove inner door if there is a vestibule with two doors. ☐ Move or remove obstructing partitions. ☐ Note:
20. Is there a 36-inch-wide path to all fixtures?	☐	☐	☐	☐ Remove obstructions. ☐ Note:
21. Is the stall door operable with a closed fist, inside and out?	☐	☐	☐	☐ Replace inaccessible knobs with lever or loop handles. ☐ Add lever extensions. ☐ Note:
22. Is there a wheelchair-accessible stall that has an area of at least 5 feet by 5 feet, clear of the door swing, OR is there a stall that is less accessible but that provides greater access than a typical stall (either 36 by 69 inches or 48 by 69 inches)?	☐	☐	☐	☐ Move or remove partitions. ☐ Reverse the door swing if it is safe to do so. ☐ Note:
23. In the accessible stall, are there grab bars behind and on the side wall nearest to the toilet?	☐	☐	☐	☐ Add grab bars. ☐ Note:
24. Is the toilet seat 17 to 19 inches high?	☐	☐	☐	☐ Add raised seat. ☐ Note:
25. Does one lavatory have a 30-inch-wide by 48-inch-deep clear space in front? *Note: A maximum of 19 inches of the required depth may be under the lavatory.*	☐	☐	☐	☐ Rearrange furnishings. ☐ Replace lavatory. ☐ Remove or alter cabinetry to provide space underneath. Make sure hot pipes are covered. ☐ Move a partition or wall. ☐ Note:
26. Is the lavatory rim no higher than 34 inches?	☐	☐	☐	☐ Adjust or replace lavatory. ☐ Note:
27. Is there at least 29 inches from the floor to the bottom of the lavatory apron? (Excluding pipes)?	☐	☐	☐	☐ Adjust or replace lavatory. ☐ Note:
28. Can the faucet be operated with one closed fist?	☐	☐	☐	☐ Replace faucet handles with paddle type. ☐ Note:
29. Are soap and other dispensers and hand dryers within reach ranges (see page 7) and usable with one closed fist?	☐	☐	☐	☐ Lower dispensers. ☐ Replace with or provide additional accessible dispensers. ☐ Note:
30. Is the mirror mounted with the bottom edge of the reflecting surface 40 inches high or lower?	☐	☐	☐	☐ Lower or tilt down the mirror. ☐ Add a larger mirror anywhere in the room. ☐ Note:
Pit Toilets	**n/a**	**Yes**	**No**	**Pit Toilets**
31.				

☒ Check here if section does not apply to this park and move to next section.				
32. Is there a clear space of 60 inches by 60 inches adjacent to the toilet?	☐	☐	☐	☐ Repair as needed ☐ Note:
33. Does the height of the pit toilet riser comply with ADAAG 4.16.3?	☐	☐	☐	☐ Repair as needed ☐ Note:
34. Is the maneuvering space less than or equal to 1:50? (1:33 maximum allowed for drainage)	☐	☐	☐	☐ Repair as needed ☐ Note:
35. If the pit toilet has walls, are grab bars installed consistent with ADAAG 4.16.4?	☐	☐	☐	☐ Repair as needed ☐ Note:
36. Is the surface adjacent to the pit toilet firm and stable?	☐	☐	☐	☐ Repair as needed ☐ Note:
Utilities	**n/a**	**Yes**	**No**	**Utilities**
☒ Check here if section does not apply to this park and move to next section.				
37. Is the maneuvering space less than or equal to 1:50? (1:33 maximum allowed for drainage)	☐	☐	☐	☐ Repair as needed ☐ Note:
38. Is the surface adjacent to the utility firm and stable?	☐	☐	☐	☐ Repair as needed ☐ Note:
39. Are fixed water spouts located 28 inches minimum to 36 inches maximum above the ground or floor space?	☐	☐	☐	☐ Repair as needed ☐ Note:
40. Is the maneuvering space less than or equal to 1:50? (1:33 maximum allowed for drainage)	☐	☐	☐	☐ Repair as needed ☐ Note:
Drinking Fountains	**n/a**	**Yes**	**No**	**Drinking Fountains**
☐ Check here if section does not apply to this park and move to next section.				
41. Is there at least one fountain with clear floor space of at least 30 by 48 inches in front?	☐	☒	☐	☐ Clear more room by rearranging or removing furnishings. ☐ Note:
42. Is there one fountain with its spout no higher than 36 inches from the ground, and another with a standard height spout (or a single "hi-lo" fountain)?	☐	☒	☐	☐ Provide cup dispensers for fountains with spouts that are too high. ☐ Provide accessible water cooler. ☐ Note:
43. Are controls mounted on the front or on the side near the front edge, and operable with one closed fist?	☐	☒	☐	☐ Replace the controls. ☐ Note:
44. Is each water fountain cane-detectable (located within 27 inches off the floor or protruding less than 4 inches from the wall, into the circulation path?	☐	☐	☒	☐ Place a planter or other cane-detectable barrier on each side at floor level. ☐ Note:**Clearance= 27.5" fountain by field #10**
Telephones	**n/a**	**Yes**	**No**	**Telephones**
☒ Check here if section does not apply to this park and move to next section.				
45. If pay or public use phones are provided, is there clear floor space of at least 30 by 48 inches in front of at least one?	☐	☐	☐	☐ Move furnishings. ☐ Replace booth with open station. ☐ Note:
46. Is the highest operable part of the phone no higher than 48 inches (up to 54 inches if a side approach is possible)?	☐	☐	☐	☐ Lower telephone. ☐ Note:
47. Does the phone protrude no more than 4 inches into the circulation space?	☐	☐	☐	☐ Place a cane-detectable barrier on each side at floor level. ☐ Note:

48. Does the phone have push-button controls?	☐	☐	☐	☐ Contact phone company to install push-buttons. ☐ Note:
49. Is the phone hearing-aid compatible?	☐	☐	☐	☐ Contact phone company to replace with hearing-aid compatible phone. ☐ Note:
50. Is the phone adapted with volume control?	☐	☐	☐	☐ Contact the phone company to add volume control. ☐ Note:
51. Is the phone with volume control identified with appropriate signage?	☐	☐	☐	☐ Add signage. ☐ Note:
52. If there are four or more public phones in the building, is one of the phones equipped with a text telephone (TT or TDD)?	☐	☐	☐	☐ Install a text telephone. ☐ Have a portable text telephone available. ☐ Provide a shelf and outlet next to phone. ☐ Note:
53. Is the location of the text telephone identified by accessible signage bearing the International TDD Symbol?	☐	☐	☐	☐ Add signage. ☐ Note:

Directional and Informational Signage	**n/a**	**Yes**	**No**	**Directional and Informational Signage**
☐ Check here if section does not apply to this park and move to next section.				
54. If mounted about 80 inches, do they have letters at least 3 inches high, with high contrast, and non-glare finish?	☐	☐	☒	☒ Review requirements and replace signs as needed, meeting the requirements for character size, contrast, and finish. ☐ Note:
55. Do directional and informational signs comply with legibility requirements? 56. (Building directories or temporary signs need not comply.)	☐	☐	☒	☒ Review requirements and replace signs as needed, meeting the requirements for character size, contrast, and finish. ☐ Note:

Seats, Tables and Counters	**n/a**	**Yes**	**No**	**Seats, Tables and Counters**
☐ Check here if section does not apply to this park and move to next section.				
50. Are the spaces for wheelchair seating distributed throughout? (Cover or uncovered gathering areas, bleachers)	☐	☐	☒	☐ Rearrange tables to allow room for wheelchairs in seating areas throughout the area. ☐ Remove some fixed seating. ☒ Note**: No W/C spaces in the 10 picnic tables under bleachers**
51. If picnic tables are provided, are at least 50% and no less than two of the tables, accessible?	☐	☐	☒	☒ Replace as needed ☐ Note:
52. Are knee spaces at accessible picnic tables at least 27 inches high, 30 inches wide, and 19 inches deep?	☐	☐	☒	☒ Replace or raise tables. ☐ Note:
53. Are picnic tables spaced such that all areas of the table are accessible?	☐	☐	☒	☐ Rearrange tables to allow room for wheelchairs in seating areas throughout the area. ☐ Remove some fixed seating. ☐ Note:
54. At each type of cashier counter, is there a portion of the main counter that is no more than 36 inches high?	☒	☐	☐	☐ Provide a lower auxiliary counter or folding shelf. ☐ Arrange the counter and surrounding furnishings to create a space to hand

				items back and forth. ☐ Note:
55. Is there a portion of food-ordering counters that is no more than 36 inches high, or is there space at the side for passing items to customers who have difficulty reaching over a high counter?	☒	☐	☐	☐ Lower section of counter. ☐ Arrange the counter and surrounding furnishings to create a space to pass items. ☐ Note:
Fire Rings	**n/a**	**Yes**	**No**	**Fire Rings**
☒ Check here if section does not apply to this park and move to next section.				
56. Do all fire rings have a clear space extending a minimum 48" deep by 48" wide at all usable portions of the ring?	☐	☐	☐	☐ Install clear spaces as needed ☐ Note:
57. Are the clear spaces around the fire pit on a firm and stable surface?	☐	☐	☐	☐ Correct as needed ☐ Note:
58. Is the fire surface height a minimum of 9" above the ground/floor?	☐	☐	☐	☐ Construct or renovate pits to meet clearances ☐ Note:
59. Are the slopes around fire pits not more than 1:50?	☐	☐	☐	☐ Construct or renovate pits to meet clearances ☐ Note:
Cooking Surfaces, Grills, Pedestal Grills[2]	**n/a**	**Yes**	**No**	**Cooking Surfaces, Grills, Pedestal Grills**
☒ Check here if section does not apply to this park and move to next section.				
60. Are accessible cooking features dispersed throughout the area and among the types provided?	☐	☐	☐	☐ Evenly disperse cooking features ☐ Note:
61. Are accessible cooking feature surfaces installed between 15 inches and 34 inches above the ground/floor?	☐	☐	☐	☐ Install as required ☐ Note:
62. Do operating controls and mechanisms comply with current ADAAG 4.27.1 (General) 4.27.2 (Clear Floor Space and 4.27.3 (Height)?	☐	☐	☐	☐ Install as required ☐ Note:
Fixed Trash/Recycling Containers	**n/a**	**Yes**	**No**	**Fixed Trash/Recycling Containers**
☐ Check here if section does not apply to this park and move to next section.				
63. Are trash and recycling containers accessible and do they comply with ADAAG 4.27?	☐	☒	☐	☐ Replace as needed ☐ Note:
Overlooks/Viewing Areas	**n/a**	**Yes**	**No**	**Overlooks/Viewing Areas**
☐ Check here if section does not apply to this park and move to next section.				
64. Are all viewing areas on an accessible route?	☐	☒	☐	☐ Install accessible paths as needed ☐ Note:
65. Are all viewing areas constructed to provide an unobstructed view?	☐	☒	☐	☐ Repair as needed ☐ Note:
66. Is there at least one maneuvering space that complies with ADAAG 4.2.3?	☐	☒	☐	☐ Repair as needed ☐ Note:
67. Is the ground surface firm and stable?	☐	☒	☐	☐ Repair as needed ☐ Note:

[2] Where there is only one cooking surface, grill or pedestal grill in a provided picnic area, it shall be accessible. Where multiple cooking features are provided in a picnic area, 50 percent, but no less than 2 shall be accessible.

68. Is the maneuvering space less than or equal to 1:50? (1:33 maximum allowed for drainage)	☐	☒	☐	☐ Repair as needed ☐ Note:
Telescopes/Periscopes	**n/a**	**Yes**	**No**	**Telescopes/Periscopes**
☒ Check here if section does not apply to this park and move to next section.				
69. Are at least 20%, but not less than one, telescope or periscope that complies with ADAAG 4.27?	☐	☐	☐	☐ Repair as needed ☐ Note:
70. Are the eye pieces usable from a seated position?	☐	☐	☐	☐ Repair as needed ☐ Note:
71. Is the ground surface firm and stable?	☐	☐	☐	☐ Repair as needed ☐ Note:
72. Is the maneuvering space less than or equal to 1:50? (1:33 maximum allowed for drainage)	☐	☐	☐	☐ Repair as needed ☐ Note:
Benches	**n/a**	**Yes**	**No**	**Benches**
☒ Check here if section does not apply to this park and move to next section.				
73. Where multiple benches are provided, are at least 50% consistent with this section?	☐	☐	☐	☐ Repair as needed ☐ Note:
74. Are accessible benches dispersed evenly throughout the park?	☐	☐	☐	☐ Disperse benches evenly throughout the park ☐ Note: just at play area
75. Of the accessible benches that are provided, do at least 50% of those benches have armrests consistent with ADAAG 4.26.3?	☐	☐	☐	☐ Repair as needed ☐ Note:
76. Are the front edges of accessible benches between 17 and 19 inches maximum above the ground/floor?	☐	☐	☐	☐ Repair as needed ☐ Note:
77. Are floor spaces adjacent to benches consistent with ADAAG 4.2.4?	☐	☐	☐	☐ Repair as needed ☐ Note:
78. Is the ground/floor surface around the accessible benches firm and stable?	☐	☐	☐	☐ Repair as needed ☐ Note:
79. Do all accessible benches have back support the full length of the bench?	☐	☐	☐	☐ Repair as needed ☐ Note:
Playground Equipment Accessibility	**n/a**	**Yes**	**No**	**Playground Equipment Accessibility**
☒ Check here if section does not apply to this park and move to next section.				
80. Is there at least one of each play component on an accessible route[3]?	☐	☐	☐	☐ Expand existing accessible routes as needed ☐ Construct accessible routes ☐ Note: bark surface
81. Is there at least one of each ground-level play component on an accessible route?	☐	☐	☐	☐ Expand existing accessible routes as needed ☐ Construct accessible routes ☐ Note:
82. Are the play components integrated for use by all children; including those with disabilities?	☐	☐	☐	☐ Ensure play components on accessible routes can be used by all children ☐ Note:

[3] Different types of play components are based on the general experience provided by the play component. Different types include, but are no limited to, rocking, swinging, climbing, spinning and sliding. Components may be elevated or at or below ground level.

Trails	n/a	Yes	No	Trails
☐ Check here if section does not apply to this park and move to next section.				
83. Is the clear width of the trail 36 inches?	☐	☒	☐	☐ Renovate as required ☐ Construct all new trails to code ☐ Note:
84. Are openings in the trail less than ½ inch? *Note: (Board slat spaces, etc. – Elongated openings should be placed so that the long dimension is perpendicular or diagonal to the dominate direction of travel.)*	☐	☒	☐	☐ Renovate as required ☐ Construct all new trails to code ☐ Note:
85. Is the trail free of constructed or natural barriers?	☐	☒	☐	☐ Remove as needed ☐ Note:
86. Are all overhead hazards maintained at a height that is sufficient for all expected users of the trail? (Remember, Objects that protrude into a pathway at a height greater than 27" are difficult for the blind or persons with visual disabilities who use canes to detect.)	☐	☐	☒	☐ Renovate as required ☐ Construct all new trails to code ☐ Note: **Support pieces for grandstands obstruct access into picnic area – serious obstacles for blind persons.**
87. Is there a segment in the trail that has a 10% grade for more than 30 feet?	☐	☐	☒	☐ Construct level rest interval[4] ☐ Note:
88. Are all cross slopes a maximum of 3%?	☐	☒	☐	☐ Renovate as required ☐ Construct all new trails to code ☐ Note:
89. Are all tread obstacles a maximum of 1"?	☐	☒	☐	☐ Renovate as required ☐ Construct all new trails to code ☐ Note:
90. Are passing spaces (6" x 60") provided at maximum intervals of 200 ft. whenever the clear tread width is less then 60"?	☒	☐	☐	☐ Renovate as required ☐ Construct all new trails to code ☐ Note:
91. Does the trail have or require edge protection?	☐	☐	☒	☐ Renovate as required – Where provided, edge protection should be a minimum of 3". ☐ Construct all new trails to code ☐ Note:
92. Does the trail have signs that clearly indicate the type of use, rules and difficult conditions for the trail?	☐	☐	☒	☐ Renovate as required ☐ Construct all new trails to code ☐ Note:
93. Are there signs that warn users that changes in trail level or tread obstacles could not be removed?	☐	☐	☒	☐ Renovate as required ☐ Construct all new trails to code ☐ Note:
94. Are there detectable warnings anywhere a route crosses a traffic way?	☐	☒	☐	☐ Repair as needed ☐ Note:
Shooting Facilities	**n/a**	**Yes**	**No**	**Shooting Facilities**
☒ Check here if section does not apply to this park and move to next section.				
95. Does the English Pit range have 60-inch diameter space with slopes not steeper than 1:48 so a wheelchair can turn around?	☐	☐	☐	☐ Renovate as needed ☐ Install accessible seating area ☐ Note

[4] Resting intervals must be 60" minimum on length and at least as wide as the widest portion of the trail segment leading to the resting interval with a cross slope that does not exceed 3%.

96. Do the firing benches have a wheelchair accessible area with a bench between 27 and 34 inches with a minimum of 19" leg space?	☐	☐	☐	☐ Renovate as needed ☐ Install accessible seating area ☐ Note
97. If fixed firing positions are provided, at least 5% but not less than one of each type of firing position, must be served by an accessible route. Does English Pit have an accessible route?	☐	☐	☐	☐ Renovate as needed ☐ Install accessible route ☐ Note
98. Does the park have accessible routes to all target impact areas?	☐	☐	☐	☐ Expand existing accessible routes as needed ☐ Construct accessible routes ☐ Note:
Aquatic Recreation Facilities	**n/a**	**Yes**	**No**	**Aquatic Recreation Facilities**
☒ Check here if section does not apply to this park and move to next section.				
99. Is there an accessible route (36" wide) over beach areas that allow access to the water's edge?	☐	☐	☐	☐ Renovate as needed ☐ Install accessible route ☐ Note
100. Are there accessible routes with handrails that lead into designated swim areas such as ponds, lakes, etc.	☐	☐	☐	☐ Renovate as needed ☐ Install accessible route ☐ Note
Fishing piers and Platforms	**n/a**	**Yes**	**No**	**Fishing piers and Platforms**
☒ Check here if section does not apply to this park and move to next section.				
101. Does this park have a facility specifically designed and constructed for fishing?	☐	☐	☐	(Structures that were not built specifically for fishing do not need to meet ADAAG guidelines. Structures designed as fishing piers or platforms, must have an accessible route.)
102. Does the park have a gangway serving the fishing pier or platform?	☐	☐	☐	☐ Install a gangway platform – Gangway 1:12 maximum slope or at least 30 feet long. ☐ Renovate existing platform to meet code (Check specific building codes) ☐ Note
103. Does the gangway have a transition plate to the pier or platform that meets code?	☐	☐	☐	☐ Install a transition plate[5] ☐ Adjust existing transition plate to meet code ☐ Note
104. Does the gangway have handrails?	☐	☐	☐	☐ Install handrail to meet code ☐ Ensure existing rails meet code ☐ Note
105. Does the fishing pier or platform have railings, guards or handrails[6]?	☐	☐	☐	☐ Install as needed ☐ Renovate existing structure to meet code ☐ Note
106. Does the fishing pier or platform have edge protection[i]?	☐	☐	☐	☐ Install ☐ Renovate existing edge protection ☐ Note

[5] Gangways are not required to have to have landings at the end, if transition plates are provided. If the slope of the transition plate is greater that 1: 20 (5%), the transition plates must have a landing at the end of the transition plate not connected to the gangway and must comply with other ramp requirements.

[6] Where railings, guards or handrails are provided on a fishing pier or platform, at least 25 % of the rails must be 34 inches or less in height above the ground or dock so accommodate a person in a wheelchair. These railings must be dispersed as equally as possible to all areas of the fishing pier.

107. Does the fishing pier or platform have clear floor or ground space[ii]?	☐	☐	☐	☐ Install ☐ Renovate existing edge protection ☐ Note
108. Does the fishing pier or platform have sufficient turning space[iii]?	☐	☐	☐	☐ Install ☐ Renovate existing edge protection ☐ Note
Boating Facilities	**n/a**	**Yes**	**No**	**Boating Facilities**
☒ Check here if section does not apply to this park and move to next section.				
109. Is there an accessible route to the boating facilities?	☐	☐	☐	☐ Install ☐ Renovate existing route ☐ Note
110. Does the gangway to the dock or floating dock deigned to provide for a maximum 1:12 (8.33%) slope ? *Note: Not required to be longer than 80 feet. (Elevators may be used in lieu of gangways) In smaller facilities with less than 25 boat slips, the slope of the gangway may exceed 1:12, if the gangway is at least 30 feet long.*	☐	☐	☐	☐ Install ☐ Renovate existing route ☐ Note
111. Does the gangway have a transition plate to the pier or platform that meets code[iv]?	☐	☐	☐	☐ Install a transition plate ☐ Adjust existing transition plate to meet code ☐ Note

<table>
<tr>
<td>112. Where boat slips[7] are provided, does the number of accessible slips[8] comply with the table to the right?
Note: If boat slips at a facility are not identified or demarcated by length, each 40 feet of boat slip edge along the perimeter of a pier will be counted as one boat slip</td>
<td>☐</td>
<td>☐</td>
<td>☐</td>
<td>
<table>
<tr><th colspan="2">Number of Accessible Boat Slips Required</th></tr>
<tr><td>Total Slips in Facility</td><td>Minimum Accessible Slips</td></tr>
<tr><td>1-25</td><td>1</td></tr>
<tr><td>26-50</td><td>2</td></tr>
<tr><td>50-100</td><td>3</td></tr>
<tr><td>101-150</td><td>4</td></tr>
</table>
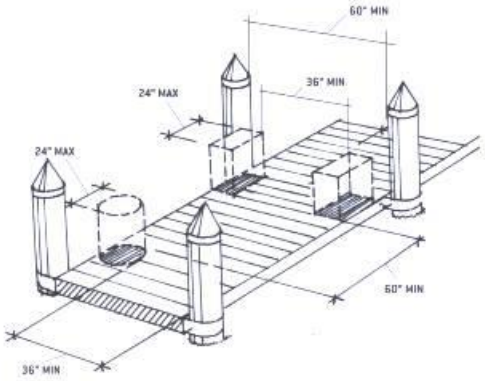

PIER CLEARANCE SPACE REDUCTION
</td>
</tr>
<tr>
<td>If the facility only has a boarding pier (see footnote # 9) at least 5% but not less than, must comply with these guidelines. The entire length of accessible boarding piers must comply with the same provisions that apply to slips.

113. Does this facility meet this regulation?</td>
<td>☐</td>
<td>☐</td>
<td>☐</td>
<td>☐ Install
☐ Renovate boarding pier
☐ Note</td>
</tr>
<tr>
<td>114. Is this facility compromised only of a boat launch with no boarding ramp or pier?</td>
<td>☐</td>
<td>☐</td>
<td>☐</td>
<td>If yes, there are no specific provisions that address access to launch ramps without boarding piers.</td>
</tr>
</table>

[7] A boat slip is the portion of a pier, main pier, finger pier, or float where a boat is berthed or moored, or used for embarking or disembarking. Boarding piers that are not part of a boat launch ramp are classified as “boat slips” for the purpose of this survey.

[8] Accessible boat slips must have clear pier space at least 60 inches wide and as long as the slip. Every 10 feet of linear pier edge serving the accessible slips must have at least one continuous clear opening that is at least 60 inches wide. The width of the clear pier space may be 36 inches wide for a length of 24 inches, as long as multiple 36-inch segments are separated by segments that are 60 inches minimum clear in width and 60 inches minimum clear in length, and the clear openings are at least 60 inches deep. Edge protection is not required

Item Number	Notes
	At field #10, area beneath grandstands contain picnic tables. Needs wheelchair spaces on tables.
	Structural supports for grandstand posts could be hazard for visually impaired.
	North & south restrooms (field #10) at too high by 1/2 "
	3-tiered bleachers without backs or sides rails.
	Coyote Trails Nature Center
	H/C Parking signs mounted too low
	No detectible warning strips – three needed
	No W/C spaces at two picnic tables in shelter or at two tables in grass.
	Path to Bee Garden is unstable

4.2.3* Wheelchair Turning Space. The space required for a wheelchair to make a 180-degree turn is a clear space of 60 in (1525 mm) diameter (see Fig. 3(a)) or a T-shaped space (see Fig. 3(b)). Appendix Note

4.2.4* Clear Floor or Ground Space for Wheelchairs.

4.2.4.1 Size and Approach. The minimum clear floor or ground space required to accommodate a single, stationary wheelchair and occupant is 30 in by 48 in (760 mm by 1220 mm) (see Fig. 4(a)). The minimum clear floor or ground space for wheelchairs may be positioned for forward or parallel approach to an object (see Fig. 4(b) and (c)). Clear floor or ground space for wheelchairs may be part of the knee space required under some objects.

4.2.4.2 Relationship of Maneuvering Clearance to Wheelchair Spaces. One full unobstructed side of the clear floor or ground space for a wheelchair shall adjoin or overlap an accessible route or adjoin another wheelchair clear floor space. If a clear

floor space is located in an alcove or otherwise confined on all or part of three sides, additional maneuvering clearances shall be provided as shown in Fig. 4(d) and (e).

4.2.4.3 Surfaces for Wheelchair Spaces. Clear floor or ground spaces for wheelchairs shall comply with 4.5. Appendix Note

4.16.3* Height. The height of water closets shall be 17 in to 19 in (430 mm to 485 mm), measured to the top of the toilet seat (see Fig. 29(b)). Seats shall not be sprung to return to a lifted position. Appendix Note

4.16.4* Grab Bars. Grab bars for water closets not located in stalls shall comply with 4.26 and Fig. 29. The grab bar behind the water closet shall be 36 in (915 mm) minimum. Appendix Note

4.26.3 Structural Strength. The structural strength of grab bars, tub and shower seats, fasteners, and mounting devices shall meet the following specification:

(1) Bending stress in a grab bar or seat induced by the maximum bending moment from the application of 250 lbf (1112N) shall be less than the allowable stress for the material of the grab bar or seat.

(2) Shear stress induced in a grab bar or seat by the application of 250 lbf (1112N) shall be less than the allowable shear stress for the material of the grab bar or seat. If the connection between the grab bar or seat and its mounting bracket or other support is considered to be fully restrained, then direct and torsional shear stresses shall be totaled for the combined shear stress, which shall not exceed the allowable shear stress.

(3) Shear force induced in a fastener or mounting device from the application of 250 lbf (1112N) shall be less than the allowable lateral load of either the fastener or mounting device or the supporting structure, whichever is the smaller allowable load.

(4) Tensile force induced in a fastener by a direct tension force of 250 lbf (1112N) plus the maximum moment from the application of 250 lbf (1112N) shall be less than the allowable withdrawal load between the fastener and the supporting structure.

(5) Grab bars shall not rotate within their fittings.

4.27 Controls and Operating Mechanisms.

4.27.1 General. Controls and operating mechanisms required to be accessible by 4.1 shall comply with 4.27.

4.27.2 Clear Floor Space. Clear floor space complying with 4.2.4 that allows a forward or a parallel approach by a person using a wheelchair shall be provided at controls, dispensers, receptacles, and other operable equipment.

4.27.3* Height. The highest operable part of controls, dispensers, receptacles, and other operable equipment shall be placed within at least one of the reach ranges

specified in 4.2.5 and 4.2.6. Electrical and communications system receptacles on walls shall be mounted no less than 15 in (380 mm) above the floor. Appendix Note

> EXCEPTION: These requirements do not apply where the use of special equipment dictates otherwise or where electrical and communications systems receptacles are not normally intended for use by building occupants.

4.27.4 Operation. Controls and operating mechanisms shall be operable with one hand and shall not require tight grasping, pinching, or twisting of the wrist. The force required to activate controls shall be no greater than 5 lbf (22.2 N).

---

[i] Where railings, guards or handrails are provided, edge protection must be provided and extended a minimum of 2 inches above the ground or deck surface. Edge protection is not required where a railing, guardrail or handrail is provided, if the deck surface extends a minimum of 12 inches beyond the inside face of the railing.

[ii] At least one clear floor or ground space (30 inches by 48 inches) must be provided at each location that has a railing height of 34 inches maximum. If there is no railing, at least one clear space must be provided on a pier or platform.

[iii] Fishing piers and platforms must have at least one turning area, either 60-inch turning space or a T-shaped space to allow a person using a mobility device or wheelchair to make a 180-degree turn.

[iv] Gangways are not required to have to have landings at the end, if transition plates are provided. If the slope of the transition plate is greater that 1: 20 (5%), the transition plates must have a landing at the end of the transition plate not connected to the gangway and must comply with other ramp requirements.

ADA Compliance Program

MEDFORD PARKS AND RECREATION DEPARTMENT

ADA ACCESSIBILITY SURVEY FOR PARK FACILITIES

Date: March 3, 2016 **Estimated Cost:**

Facility: Veterans Park **Department Notified:**

Survey by: Jean Akers **Date of Notification:**

Check all applicable building codes and ADAAG publications prior to any renovation or construction. This survey is only a guideline.

ITEM				RECOMMENDATIONS
Accessible Routes[1]	**n/a**	**Yes**	**No**	**Accessible Routes**
☐ Check here if section does not apply to this park and move to next section.				
1. Does the park have accessible routes to all accessible facilities within the park?	☐	☐	☒	☐ Expand existing accessible routes as needed ☐ Construct accessible routes ☐ Note:
2. Where court sports are provided (i.e. tennis, basketball, and volleyball) are there accessible routes to each court? (Routes must connect both sides of the court)	☒	☐	☐	☐ Expand existing accessible routes as needed ☐ Construct accessible routes ☐ Note:
3. Are there accessible routes to any and all animal containment areas?	☒	☐	☐	☐ Expand existing accessible routes as needed ☐ Construct accessible routes ☐ Note:
4. Are there detectable warnings anywhere a route crosses a traffic way?	☐	☐	☒	☐ Repair as needed ☐ Note:
ITEM				**RECOMMENDATIONS**
Parking and Drop-off Areas	**n/a**	**Yes**	**No**	**Parking and Drop-off Areas**
☐ Check here if section does not apply to this park and move to next section.				
5. Are an adequate number of accessible parking spaces available? The table below gives the ADAAG requirement for new construction and alterations (for lots with more than 100 spaces refer to ADAAG). Accessible Spaces per Overall spaces	☐	☒	☐	☐ Reconfigure a reasonable number of spaces by repainting stripes. ☐ Construct accessible routes ☒ Note: **2 H/C spaces at south end**

Total Spaces	Accessible Spaces Required
1 to 25	1 space
26 to 50	2 spaces
51 to 75	3 spaces
76 to 100	4 spaces

[1] Accessible routes must comply with ADAAG provisions for the location, width (minimum 36 inches) passing space, head room, surface, slope (Maximum 1:12 (or 8.33%). Accessible routes must connect all accessible elements within the facility. Accessible routes must be stable, firm and slip resistant. There is no requirement to change the surface of a playing field to an accessible surface.

6. Are an adequate number of van accessible spaces provided? At least 1 of every 8 accessible spaces must be van-accessible (with a minimum of 1 van-accessible space in all cases.)	☐	☒	☐	☐ Reconfigure to provide van-accessible space(s).
7. Are the access aisles part of the accessible route?	☐	☒	☐	☐ Add curb ramps. ☐ Reconstruct sidewalk
8. Are the accessible spaces closest to the accessible entrance?	☐	☐	☒	☐ Reconfigure spaces.
9. Are accessible spaces marked with and International Symbol of Accessibility? Are there signs reading "Van Accessible" at van spaces?	☐	☒	☐	☐ Add signs, placed so that they are not obstructed by cars.
10. Is there an enforcement procedure to ensure that accessible parking is used only by those who need it?	☐	☒	☐	☐ Implement a policy to check periodically for violators and report them to the proper authorities.
Team Player Seating Areas	**n/a**	**Yes**	**No**	**Team Player Seating Areas**
☒ Check here if section does not apply to this park and move to next section.				
11. Do fixed team or player seating areas contain the required number of wheelchair spaces and companion seats required by ADAAG?	☐	☐	☐	☐ Renovate as needed ☐ Install accessible seating area ☐ Note
Restrooms	**n/a**	**Yes**	**No**	**Restrooms**
☐ Check here if section does not apply to this park and move to next section.				
12. If rest rooms are available to the public, is at least one rest room (either one for each sex, or unisex) fully accessible?	☐	☒	☐	☐ Reconfigure rest room. ☐ Combine rest rooms to create one unisex accessible rest room. ☒ Note: **Closed for season**
13. Are there signs at inaccessible rest rooms that give directions to accessible ones?	☒	☐	☐	☐ Install accessible signs. ☐ Note:
14. Is there tactile signage identifying rest rooms? *Note: Mount signs on the wall, on the latch side of the door, complying with the permanent signage.*	☐	☒	☐	☐ Add accessible signage, placed to the side of the door, 60 inches to centerline (not on the door itself). ☐ If symbols are used, add supplementary verbal signage. ☐ Note:
15. Are pictograms or symbols used to identify rest rooms, and, if used, are raised characters and braille included below?	☐	☒	☐	☐ If symbols are used, add supplementary verbal signage with raised characters and braille below pictogram symbol. ☐ Note:
16. Is the doorway at least 32 inches clear?	☐	☒	☐	☐ Install offset (swing-clear) hinges. ☐ Widen the doorway. ☐ Note:
17. Are doors equipped with accessible handles (operable with a closed fist), 48 inches high or less?	☐	☐	☐	☐ Lower handles. ☐ Replace knobs or latches with lever or loop handles. ☐ Add lever extensions. ☐ Install power-assisted or automatic door openers. ☐ Note:

18. Can doors be opened easily (5 lbf maximum force)?	☐	☐	☐	☐ Adjust or replace closers. ☐ Install lighter doors. ☐ Install power-assisted or automatic door openers. ☐ Note:
19. Does the entry configuration provide adequate maneuvering space for a person using a wheelchair? *Note: A person using a wheelchair needs 36 inches of clear width for forward movement, and a 5-foot diameter clear space or a T-shaped space to make turns. A minimum distance of 48 inches clear of the door swing is needed between the two doors of an entry vestibule.*	☐	☐	☐	☐ Rearrange furnishings such as chairs and trash cans. ☐ Remove inner door if there is a vestibule with two doors. ☐ Move or remove obstructing partitions. ☐ Note:
20. Is there a 36-inch-wide path to all fixtures?	☐	☐	☐	☐ Remove obstructions. ☐ Note:
21. Is the stall door operable with a closed fist, inside and out?	☐	☐	☐	☐ Replace inaccessible knobs with lever or loop handles. ☐ Add lever extensions. ☐ Note:
22. Is there a wheelchair-accessible stall that has an area of at least 5 feet by 5 feet, clear of the door swing, OR is there a stall that is less accessible but that provides greater access than a typical stall (either 36 by 69 inches or 48 by 69 inches)?	☐	☐	☐	☐ Move or remove partitions. ☐ Reverse the door swing if it is safe to do so. ☐ Note:
23. In the accessible stall, are there grab bars behind and on the side wall nearest to the toilet?	☐	☐	☐	☐ Add grab bars. ☐ Note:
24. Is the toilet seat 17 to 19 inches high?	☐	☐	☐	☐ Add raised seat. ☐ Note:
25. Does one lavatory have a 30-inch-wide by 48-inch-deep clear space in front? *Note: A maximum of 19 inches of the required depth may be under the lavatory.*	☐	☐	☐	☐ Rearrange furnishings. ☐ Replace lavatory. ☐ Remove or alter cabinetry to provide space underneath. Make sure hot pipes are covered. ☐ Move a partition or wall. ☐ Note:
26. Is the lavatory rim no higher than 34 inches?	☐	☐	☐	☐ Adjust or replace lavatory. ☐ Note:
27. Is there at least 29 inches from the floor to the bottom of the lavatory apron? (Excluding pipes)?	☐	☐	☐	☐ Adjust or replace lavatory. ☐ Note:
28. Can the faucet be operated with one closed fist?	☐	☐	☐	☐ Replace faucet handles with paddle type. ☐ Note:
29. Are soap and other dispensers and hand dryers within reach ranges (see page 7) and usable with one closed fist?	☐	☐	☐	☐ Lower dispensers. ☐ Replace with or provide additional accessible dispensers. ☐ Note:
30. Is the mirror mounted with the bottom edge of the reflecting surface 40 inches high or lower?	☐	☐	☐	☐ Lower or tilt down the mirror. ☐ Add a larger mirror anywhere in the room. ☐ Note:
Pit Toilets	**n/a**	**Yes**	**No**	**Pit Toilets**
31.				

☒ Check here if section does not apply to this park and move to next section.				
32. Is there a clear space of 60 inches by 60 inches adjacent to the toilet?	☐	☐	☐	☐ Repair as needed ☐ Note:
33. Does the height of the pit toilet riser comply with ADAAG 4.16.3?	☐	☐	☐	☐ Repair as needed ☐ Note:
34. Is the maneuvering space less than or equal to 1:50? (1:33 maximum allowed for drainage)	☐	☐	☐	☐ Repair as needed ☐ Note:
35. If the pit toilet has walls, are grab bars installed consistent with ADAAG 4.16.4?	☐	☐	☐	☐ Repair as needed ☐ Note:
36. Is the surface adjacent to the pit toilet firm and stable?	☐	☐	☐	☐ Repair as needed ☐ Note:
Utilities	**n/a**	**Yes**	**No**	**Utilities**
☒ Check here if section does not apply to this park and move to next section.				
37. Is the maneuvering space less than or equal to 1:50? (1:33 maximum allowed for drainage)	☐	☐	☐	☐ Repair as needed ☐ Note:
38. Is the surface adjacent to the utility firm and stable?	☐	☐	☐	☐ Repair as needed ☐ Note:
39. Are fixed water spouts located 28 inches minimum to 36 inches maximum above the ground or floor space?	☐	☐	☐	☐ Repair as needed ☐ Note:
40. Is the maneuvering space less than or equal to 1:50? (1:33 maximum allowed for drainage)	☐	☐	☐	☐ Repair as needed ☐ Note:
Drinking Fountains	**n/a**	**Yes**	**No**	**Drinking Fountains**
☒ Check here if section does not apply to this park and move to next section.				
41. Is there at least one fountain with clear floor space of at least 30 by 48 inches in front?	☐	☐	☐	☐ Clear more room by rearranging or removing furnishings. ☐ Note:
42. Is there one fountain with its spout no higher than 36 inches from the ground, and another with a standard height spout (or a single "hi-lo" fountain)?	☐	☐	☐	☐ Provide cup dispensers for fountains with spouts that are too high. ☐ Provide accessible water cooler. ☐ Note:
43. Are controls mounted on the front or on the side near the front edge, and operable with one closed fist?	☐	☐	☐	☐ Replace the controls. ☐ Note:
44. Is each water fountain cane-detectable (located within 27 inches off the floor or protruding less than 4 inches from the wall, into the circulation path?	☐	☐	☐	☐ Place a planter or other cane-detectable barrier on each side at floor level. ☐ Note:
Telephones	**n/a**	**Yes**	**No**	**Telephones**
☒ Check here if section does not apply to this park and move to next section.				
45. If pay or public use phones are provided, is there clear floor space of at least 30 by 48 inches in front of at least one?	☐	☐	☐	☐ Move furnishings. ☐ Replace booth with open station. ☐ Note:
46. Is the highest operable part of the phone no higher than 48 inches (up to 54 inches if a side approach is possible)?	☐	☐	☐	☐ Lower telephone. ☐ Note:
47. Does the phone protrude no more than 4 inches into the circulation space?	☐	☐	☐	☐ Place a cane-detectable barrier on each side at floor level. ☐ Note:

48. Does the phone have push-button controls?	☐	☐	☐	☐ Contact phone company to install push-buttons. ☐ Note:
49. Is the phone hearing-aid compatible?	☐	☐	☐	☐ Contact phone company to replace with hearing-aid compatible phone. ☐ Note:
50. Is the phone adapted with volume control?	☐	☐	☐	☐ Contact the phone company to add volume control. ☐ Note:
51. Is the phone with volume control identified with appropriate signage?	☐	☐	☐	☐ Add signage. ☐ Note:
52. If there are four or more public phones in the building, is one of the phones equipped with a text telephone (TT or TDD)?	☐	☐	☐	☐ Install a text telephone. ☐ Have a portable text telephone available. ☐ Provide a shelf and outlet next to phone. ☐ Note:
53. Is the location of the text telephone identified by accessible signage bearing the International TDD Symbol?	☐	☐	☐	☐ Add signage. ☐ Note:

Directional and Informational Signage	**n/a**	**Yes**	**No**	**Directional and Informational Signage**
☐ Check here if section does not apply to this park and move to next section.				
54. If mounted about 80 inches, do they have letters at least 3 inches high, with high contrast, and non-glare finish?	☐	☐	☒	☒ Review requirements and replace signs as needed, meeting the requirements for character size, contrast, and finish. ☐ Note:
55. Do directional and informational signs comply with legibility requirements? 56. (Building directories or temporary signs need not comply.)	☐	☐	☒	☒ Review requirements and replace signs as needed, meeting the requirements for character size, contrast, and finish. ☐ Note:

Seats, Tables and Counters	**n/a**	**Yes**	**No**	**Seats, Tables and Counters**
☐ Check here if section does not apply to this park and move to next section.				
50. Are the spaces for wheelchair seating distributed throughout? (Cover or uncovered gathering areas, bleachers)	☐	☐	☒	☐ Rearrange tables to allow room for wheelchairs in seating areas throughout the area. ☐ Remove some fixed seating. ☐ Note:
51. If picnic tables are provided, are at least 50% and no less than two of the tables, accessible?	☐	☐	☒	☐ Replace as needed ☒ Note**: 7 picnic tables, all in grass, no W/C spaces**
52. Are knee spaces at accessible picnic tables at least 27 inches high, 30 inches wide, and 19 inches deep?	☐	☐	☒	☐ Replace or raise tables. ☐ Note:
53. Are picnic tables spaced such that all areas of the table are accessible?	☐	☐	☒	☐ Rearrange tables to allow room for wheelchairs in seating areas throughout the area. ☐ Remove some fixed seating. ☐ Note:
54. At each type of cashier counter, is there a portion of the main counter that is no more than 36 inches high?	☒	☐	☐	☐ Provide a lower auxiliary counter or folding shelf. ☐ Arrange the counter and surrounding furnishings to create a space to hand items back and forth.

				☐ Note:
55. Is there a portion of food-ordering counters that is no more than 36 inches high, or is there space at the side for passing items to customers who have difficulty reaching over a high counter?	☒	☐	☐	☐ Lower section of counter. ☐ Arrange the counter and surrounding furnishings to create a space to pass items. ☐ Note:
Fire Rings	**n/a**	**Yes**	**No**	**Fire Rings**
☒ Check here if section does not apply to this park and move to next section.				
56. Do all fire rings have a clear space extending a minimum 48" deep by 48" wide at all usable portions of the ring?	☐	☐	☐	☐ Install clear spaces as needed ☐ Note:
57. Are the clear spaces around the fire pit on a firm and stable surface?	☐	☐	☐	☐ Correct as needed ☐ Note:
58. Is the fire surface height a minimum of 9" above the ground/floor?	☐	☐	☐	☐ Construct or renovate pits to meet clearances ☐ Note:
59. Are the slopes around fire pits not more than 1:50?	☐	☐	☐	☐ Construct or renovate pits to meet clearances ☐ Note:
Cooking Surfaces, Grills, Pedestal Grills[2]	**n/a**	**Yes**	**No**	**Cooking Surfaces, Grills, Pedestal Grills**
☒ Check here if section does not apply to this park and move to next section.				
60. Are accessible cooking features dispersed throughout the area and among the types provided?	☐	☐	☐	☐ Evenly disperse cooking features ☐ Note:
61. Are accessible cooking feature surfaces installed between 15 inches and 34 inches above the ground/floor?	☐	☐	☐	☐ Install as required ☐ Note:
62. Do operating controls and mechanisms comply with current ADAAG 4.27.1 (General) 4.27.2 (Clear Floor Space and 4.27.3 (Height)?	☐	☐	☐	☐ Install as required ☐ Note:
Fixed Trash/Recycling Containers	**n/a**	**Yes**	**No**	**Fixed Trash/Recycling Containers**
☒ Check here if section does not apply to this park and move to next section.				
63. Are trash and recycling containers accessible and do they comply with ADAAG 4.27?	☐	☐	☐	☐ Replace as needed ☐ Note:
Overlooks/Viewing Areas	**n/a**	**Yes**	**No**	**Overlooks/Viewing Areas**
☒ Check here if section does not apply to this park and move to next section.				
64. Are all viewing areas on an accessible route?	☐	☐	☐	☐ Install accessible paths as needed ☐ Note:
65. Are all viewing areas constructed to provide an unobstructed view?	☐	☐	☐	☐ Repair as needed ☐ Note:
66. Is there at least one maneuvering space that complies with ADAAG 4.2.3?	☐	☐	☐	☐ Repair as needed ☐ Note:
67. Is the ground surface firm and stable?	☐	☐	☐	☐ Repair as needed ☐ Note:
68. Is the maneuvering space less than or	☐	☐	☐	☐ Repair as needed

[2] Where there is only one cooking surface, grill or pedestal grill in a provided picnic area, it shall be accessible. Where multiple cooking features are provided in a picnic area, 50 percent, but no less than 2 shall be accessible.

equal to 1:50? (1:33 maximum allowed for drainage)				☐ Note:
Telescopes/Periscopes	**n/a**	**Yes**	**No**	**Telescopes/Periscopes**
☒ Check here if section does not apply to this park and move to next section.				
69. Are at least 20%, but not less than one, telescope or periscope that complies with ADAAG 4.27?	☐	☐	☐	☐ Repair as needed ☐ Note:
70. Are the eye pieces usable from a seated position?	☐	☐	☐	☐ Repair as needed ☐ Note:
71. Is the ground surface firm and stable?	☐	☐	☐	☐ Repair as needed ☐ Note:
72. Is the maneuvering space less than or equal to 1:50? (1:33 maximum allowed for drainage)	☐	☐	☐	☐ Repair as needed ☐ Note:
Benches	**n/a**	**Yes**	**No**	**Benches**
☐ Check here if section does not apply to this park and move to next section.				
73. Where multiple benches are provided, are at least 50% consistent with this section?	☐	☐	☒	☐ Repair as needed ☒ Note: **2 benches – off pavement, not ADA**
74. Are accessible benches dispersed evenly throughout the park?	☐	☐	☒	☐ Disperse benches evenly throughout the park ☐ Note: just at play area
75. Of the accessible benches that are provided, do at least 50% of those benches have armrests consistent with ADAAG 4.26.3?	☐	☐	☒	☐ Repair as needed ☐ Note:
76. Are the front edges of accessible benches between 17 and 19 inches maximum above the ground/floor?	☐	☐	☒	☐ Repair as needed ☐ Note: **16"**
77. Are floor spaces adjacent to benches consistent with ADAAG 4.2.4?	☐	☐	☒	☐ Repair as needed ☐ Note:
78. Is the ground/floor surface around the accessible benches firm and stable?	☐	☐	☒	☐ Repair as needed ☐ Note:
79. Do all accessible benches have back support the full length of the bench?	☐	☒	☐	☐ Repair as needed ☐ Note:
Playground Equipment Accessibility	**n/a**	**Yes**	**No**	**Playground Equipment Accessibility**
☒ Check here if section does not apply to this park and move to next section.				
80. Is there at least one of each play component on an accessible route[3]?	☐	☐	☐	☐ Expand existing accessible routes as needed ☐ Construct accessible routes ☐ Note: bark surface
81. Is there at least one of each ground-level play component on an accessible route?	☐	☐	☐	☐ Expand existing accessible routes as needed ☐ Construct accessible routes ☐ Note:
82. Are the play components integrated for use by all children; including those with disabilities?	☐	☐	☐	☐ Ensure play components on accessible routes can be used by all children ☐ Note:

[3] Different types of play components are based on the general experience provided by the play component. Different types include, but are no limited to, rocking, swinging, climbing, spinning and sliding. Components may be elevated or at or below ground level.

Trails	n/a	Yes	No	Trails
☐ Check here if section does not apply to this park and move to next section.				
83. Is the clear width of the trail 36 inches?	☐	☒	☐	☐ Renovate as required ☐ Construct all new trails to code ☐ Note:
84. Are openings in the trail less than ½ inch? *Note: (Board slat spaces, etc. – Elongated openings should be placed so that the long dimension is perpendicular or diagonal to the dominate direction of travel.)*	☐	☒	☐	☐ Renovate as required ☐ Construct all new trails to code ☐ Note:
85. Is the trail free of constructed or natural barriers?	☐	☒	☐	☐ Remove as needed ☐ Note:
86. Are all overhead hazards maintained at a height that is sufficient for all expected users of the trail? (Remember, Objects that protrude into a pathway at a height greater than 27" are difficult for the blind or persons with visual disabilities who use canes to detect.)	☐	☒	☐	☐ Renovate as required ☐ Construct all new trails to code ☐ Note:
87. Is there a segment in the trail that has a 10% grade for more than 30 feet?	☐	☐	☒	☐ Construct level rest interval[4] ☐ Note:
88. Are all cross slopes a maximum of 3%?	☐	☒	☐	☐ Renovate as required ☐ Construct all new trails to code ☐ Note:
89. Are all tread obstacles a maximum of 1"?	☐	☒	☐	☐ Renovate as required ☐ Construct all new trails to code ☐ Note:
90. Are passing spaces (6" x 60") provided at maximum intervals of 200 ft. whenever the clear tread width is less then 60"?	☒	☐	☐	☐ Renovate as required ☐ Construct all new trails to code ☐ Note:
91. Does the trail have or require edge protection?	☐	☐	☒	☐ Renovate as required – Where provided, edge protection should be a minimum of 3". ☐ Construct all new trails to code ☐ Note:
92. Does the trail have signs that clearly indicate the type of use, rules and difficult conditions for the trail?	☐	☐	☒	☐ Renovate as required ☐ Construct all new trails to code ☐ Note:
93. Are there signs that warn users that changes in trail level or tread obstacles could not be removed?	☐	☐	☒	☐ Renovate as required ☐ Construct all new trails to code ☐ Note:
94. Are there detectable warnings anywhere a route crosses a traffic way?	☐	☐	☒	☐ Repair as needed ☐ Note:
Shooting Facilities	**n/a**	**Yes**	**No**	**Shooting Facilities**
☒ Check here if section does not apply to this park and move to next section.				
95. Does the English Pit range have 60-inch diameter space with slopes not steeper than 1:48 so a wheelchair can turn around?	☐	☐	☐	☐ Renovate as needed ☐ Install accessible seating area ☐ Note

[4] Resting intervals must be 60" minimum on length and at least as wide as the widest portion of the trail segment leading to the resting interval with a cross slope that does not exceed 3%.

96. Do the firing benches have a wheelchair accessible area with a bench between 27 and 34 inches with a minimum of 19" leg space?	☐	☐	☐	☐ Renovate as needed ☐ Install accessible seating area ☐ Note
97. If fixed firing positions are provided, at least 5% but not less than one of each type of firing position, must be served by an accessible route. Does English Pit have an accessible route?	☐	☐	☐	☐ Renovate as needed ☐ Install accessible route ☐ Note
98. Does the park have accessible routes to all target impact areas?	☐	☐	☐	☐ Expand existing accessible routes as needed ☐ Construct accessible routes ☐ Note:
Aquatic Recreation Facilities	**n/a**	**Yes**	**No**	**Aquatic Recreation Facilities**
☒ Check here if section does not apply to this park and move to next section.				
99. Is there an accessible route (36" wide) over beach areas that allow access to the water's edge?	☐	☐	☐	☐ Renovate as needed ☐ Install accessible route ☐ Note
100. Are there accessible routes with handrails that lead into designated swim areas such as ponds, lakes, etc.	☐	☐	☐	☐ Renovate as needed ☐ Install accessible route ☐ Note
Fishing piers and Platforms	**n/a**	**Yes**	**No**	**Fishing piers and Platforms**
☒ Check here if section does not apply to this park and move to next section.				
101. Does this park have a facility specifically designed and constructed for fishing?	☐	☐	☐	(Structures that were not built specifically for fishing do not need to meet ADAAG guidelines. Structures designed as fishing piers or platforms, must have an accessible route.)
102. Does the park have a gangway serving the fishing pier or platform?	☐	☐	☐	☐ Install a gangway platform – Gangway 1:12 maximum slope or at least 30 feet long. ☐ Renovate existing platform to meet code (Check specific building codes) ☐ Note
103. Does the gangway have a transition plate to the pier or platform that meets code?	☐	☐	☐	☐ Install a transition plate[5] ☐ Adjust existing transition plate to meet code ☐ Note
104. Does the gangway have handrails?	☐	☐	☐	☐ Install handrail to meet code ☐ Ensure existing rails meet code ☐ Note
105. Does the fishing pier or platform have railings, guards or handrails[6]?	☐	☐	☐	☐ Install as needed ☐ Renovate existing structure to meet code ☐ Note
106. Does the fishing pier or platform have edge protection[i]?	☐	☐	☐	☐ Install ☐ Renovate existing edge protection ☐ Note

[5] Gangways are not required to have to have landings at the end, if transition plates are provided. If the slope of the transition plate is greater that 1: 20 (5%), the transition plates must have a landing at the end of the transition plate not connected to the gangway and must comply with other ramp requirements.

[6] Where railings, guards or handrails are provided on a fishing pier or platform, at least 25 % of the rails must be 34 inches or less in height above the ground or dock so accommodate a person in a wheelchair. These railings must be dispersed as equally as possible to all areas of the fishing pier.

107. Does the fishing pier or platform have clear floor or ground space[ii]?	☐	☐	☐	☐ Install ☐ Renovate existing edge protection ☐ Note
108. Does the fishing pier or platform have sufficient turning space[iii]?	☐	☐	☐	☐ Install ☐ Renovate existing edge protection ☐ Note
Boating Facilities	**n/a**	**Yes**	**No**	**Boating Facilities**
☒ Check here if section does not apply to this park and move to next section.				
109. Is there an accessible route to the boating facilities?	☐	☐	☐	☐ Install ☐ Renovate existing route ☐ Note
110. Does the gangway to the dock or floating dock deigned to provide for a maximum 1:12 (8.33%) slope ? *Note: Not required to be longer than 80 feet. (Elevators may be used in lieu of gangways) In smaller facilities with less than 25 boat slips, the slope of the gangway may exceed 1:12, if the gangway is at least 30 feet long.*	☐	☐	☐	☐ Install ☐ Renovate existing route ☐ Note
111. Does the gangway have a transition plate to the pier or platform that meets code[iv]?	☐	☐	☐	☐ Install a transition plate ☐ Adjust existing transition plate to meet code ☐ Note

<table>
<tr>
<td>112. Where boat slips[7] are provided, does the number of accessible slips[8] comply with the table to the right?
Note: If boat slips at a facility are not identified or demarcated by length, each 40 feet of boat slip edge along the perimeter of a pier will be counted as one boat slip</td>
<td>☐</td>
<td>☐</td>
<td>☐</td>
<td>
<table>
<tr><th colspan="2">Number of Accessible Boat Slips Required</th></tr>
<tr><td>Total Slips in Facility</td><td>Minimum Accessible Slips</td></tr>
<tr><td>1-25</td><td>1</td></tr>
<tr><td>26-50</td><td>2</td></tr>
<tr><td>50-100</td><td>3</td></tr>
<tr><td>101-150</td><td>4</td></tr>
</table>
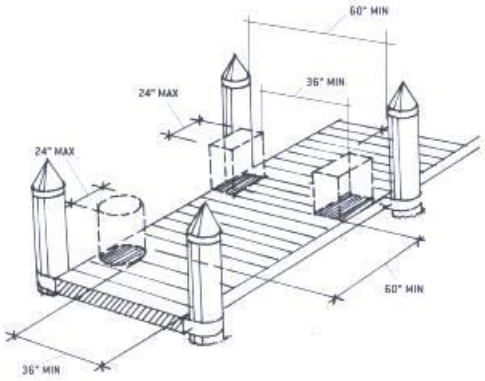

PIER CLEARANCE SPACE REDUCTION
</td>
</tr>
<tr>
<td>If the facility only has a boarding pier (see footnote # 9) at least 5% but not less than, must comply with these guidelines. The entire length of accessible boarding piers must comply with the same provisions that apply to slips.

113. Does this facility meet this regulation?</td>
<td>☐</td>
<td>☐</td>
<td>☐</td>
<td>☐ Install
☐ Renovate boarding pier
☐ Note</td>
</tr>
<tr>
<td>114. Is this facility compromised only of a boat launch with no boarding ramp or pier?</td>
<td>☐</td>
<td>☐</td>
<td>☐</td>
<td>If yes, there are no specific provisions that address access to launch ramps without boarding piers.</td>
</tr>
</table>

[7] A boat slip is the portion of a pier, main pier, finger pier, or float where a boat is berthed or moored, or used for embarking or disembarking. Boarding piers that are not part of a boat launch ramp are classified as “boat slips” for the purpose of this survey.

[8] Accessible boat slips must have clear pier space at least 60 inches wide and as long as the slip. Every 10 feet of linear pier edge serving the accessible slips must have at least one continuous clear opening that is at least 60 inches wide. The width of the clear pier space may be 36 inches wide for a length of 24 inches, as long as multiple 36-inch segments are separated by segments that are 60 inches minimum clear in width and 60 inches minimum clear in length, and the clear openings are at least 60 inches deep. Edge protection is not required

Item Number	Notes
	No detectible warning strips
	Trail at north end of south flag platform has >9% slope for ~20ft. Equates to ramp wihtout railing.

4.2.3* Wheelchair Turning Space. The space required for a wheelchair to make a 180-degree turn is a clear space of 60 in (1525 mm) diameter (see Fig. 3(a)) or a T-shaped space (see Fig. 3(b)). Appendix Note

4.2.4* Clear Floor or Ground Space for Wheelchairs.

4.2.4.1 Size and Approach. The minimum clear floor or ground space required to accommodate a single, stationary wheelchair and occupant is 30 in by 48 in (760 mm by 1220 mm) (see Fig. 4(a)). The minimum clear floor or ground space for wheelchairs may be positioned for forward or parallel approach to an object (see Fig. 4(b) and (c)). Clear floor or ground space for wheelchairs may be part of the knee space required under some objects.

4.2.4.2 Relationship of Maneuvering Clearance to Wheelchair Spaces. One full unobstructed side of the clear floor or ground space for a wheelchair shall adjoin or overlap an accessible route or adjoin another wheelchair clear floor space. If a clear

floor space is located in an alcove or otherwise confined on all or part of three sides, additional maneuvering clearances shall be provided as shown in Fig. 4(d) and (e).

4.2.4.3 Surfaces for Wheelchair Spaces. Clear floor or ground spaces for wheelchairs shall comply with 4.5. Appendix Note

4.16.3* Height. The height of water closets shall be 17 in to 19 in (430 mm to 485 mm), measured to the top of the toilet seat (see Fig. 29(b)). Seats shall not be sprung to return to a lifted position. Appendix Note

4.16.4* Grab Bars. Grab bars for water closets not located in stalls shall comply with 4.26 and Fig. 29. The grab bar behind the water closet shall be 36 in (915 mm) minimum. Appendix Note

4.26.3 Structural Strength. The structural strength of grab bars, tub and shower seats, fasteners, and mounting devices shall meet the following specification:

(1) Bending stress in a grab bar or seat induced by the maximum bending moment from the application of 250 lbf (1112N) shall be less than the allowable stress for the material of the grab bar or seat.

(2) Shear stress induced in a grab bar or seat by the application of 250 lbf (1112N) shall be less than the allowable shear stress for the material of the grab bar or seat. If the connection between the grab bar or seat and its mounting bracket or other support is considered to be fully restrained, then direct and torsional shear stresses shall be totaled for the combined shear stress, which shall not exceed the allowable shear stress.

(3) Shear force induced in a fastener or mounting device from the application of 250 lbf (1112N) shall be less than the allowable lateral load of either the fastener or mounting device or the supporting structure, whichever is the smaller allowable load.

(4) Tensile force induced in a fastener by a direct tension force of 250 lbf (1112N) plus the maximum moment from the application of 250 lbf (1112N) shall be less than the allowable withdrawal load between the fastener and the supporting structure.

(5) Grab bars shall not rotate within their fittings.

4.27 Controls and Operating Mechanisms.

4.27.1 General. Controls and operating mechanisms required to be accessible by 4.1 shall comply with 4.27.

4.27.2 Clear Floor Space. Clear floor space complying with 4.2.4 that allows a forward or a parallel approach by a person using a wheelchair shall be provided at controls, dispensers, receptacles, and other operable equipment.

4.27.3* Height. The highest operable part of controls, dispensers, receptacles, and other operable equipment shall be placed within at least one of the reach ranges

specified in 4.2.5 and 4.2.6. Electrical and communications system receptacles on walls shall be mounted no less than 15 in (380 mm) above the floor. Appendix Note

> EXCEPTION: These requirements do not apply where the use of special equipment dictates otherwise or where electrical and communications systems receptacles are not normally intended for use by building occupants.

4.27.4 Operation. Controls and operating mechanisms shall be operable with one hand and shall not require tight grasping, pinching, or twisting of the wrist. The force required to activate controls shall be no greater than 5 lbf (22.2 N).

---

[i] Where railings, guards or handrails are provided, edge protection must be provided and extended a minimum of 2 inches above the ground or deck surface. Edge protection is not required where a railing, guardrail or handrail is provided, if the deck surface extends a minimum of 12 inches beyond the inside face of the railing.

[ii] At least one clear floor or ground space (30 inches by 48 inches) must be provided at each location that has a railing height of 34 inches maximum. If there is no railing, at least one clear space must be provided on a pier or platform.

[iii] Fishing piers and platforms must have at least one turning area, either 60-inch turning space or a T-shaped space to allow a person using a mobility device or wheelchair to make a 180-degree turn.

[iv] Gangways are not required to have to have landings at the end, if transition plates are provided. If the slope of the transition plate is greater that 1: 20 (5%), the transition plates must have a landing at the end of the transition plate not connected to the gangway and must comply with other ramp requirements.

ADA Compliance Program

MEDFORD PARKS AND RECREATION DEPARTMENT

ADA ACCESSIBILITY SURVEY FOR PARK FACILITIES

Date: March 3, 2016 **Estimated Cost:**

Facility: Vogel Plaza **Department Notified:**

Survey by: Jean Akers **Date of Notification:**

Check all applicable building codes and ADAAG publications prior to any renovation or construction. This survey is only a guideline.

ITEM				RECOMMENDATIONS
Accessible Routes[1]	**n/a**	**Yes**	**No**	**Accessible Routes**
☐ Check here if section does not apply to this park and move to next section.				
1. Does the park have accessible routes to all accessible facilities within the park?	☐	☒	☐	☐ Expand existing accessible routes as needed ☐ Construct accessible routes ☐ Note:
2. Where court sports are provided (i.e. tennis, basketball, and volleyball) are there accessible routes to each court? (Routes must connect both sides of the court)	☒	☐	☐	☐ Expand existing accessible routes as needed ☐ Construct accessible routes ☐ Note:
3. Are there accessible routes to any and all animal containment areas?	☒	☐	☐	☐ Expand existing accessible routes as needed ☐ Construct accessible routes ☐ Note:
4. Are there detectable warnings anywhere a route crosses a traffic way?	☐	☐	☒	☐ Repair as needed ☐ Note:
ITEM				**RECOMMENDATIONS**
Parking and Drop-off Areas	**n/a**	**Yes**	**No**	**Parking and Drop-off Areas**
☒ Check here if section does not apply to this park and move to next section.				
5. Are an adequate number of accessible parking spaces available? The table below gives the ADAAG requirement for new construction and alterations (for lots with more than 100 spaces refer to ADAAG). Accessible Spaces per Overall spaces	☐	☐	☐	☐ Reconfigure a reasonable number of spaces by repainting stripes. ☐ Construct accessible routes ☐ Note:

Total Spaces	Accessible Spaces Required
1 to 25	1 space
26 to 50	2 spaces
51 to 75	3 spaces
76 to 100	4 spaces

[1] Accessible routes must comply with ADAAG provisions for the location, width (minimum 36 inches) passing space, head room, surface, slope (Maximum 1:12 (or 8.33%). Accessible routes must connect all accessible elements within the facility. Accessible routes must be stable, firm and slip resistant. There is no requirement to change the surface of a playing field to an accessible surface.

6. Are an adequate number of van accessible spaces provided? At least 1 of every 8 accessible spaces must be van-accessible (with a minimum of 1 van-accessible space in all cases.)	☐	☐	☐	☐ Reconfigure to provide van-accessible space(s).
7. Are the access aisles part of the accessible route?	☐	☐	☐	☐ Add curb ramps. ☐ Reconstruct sidewalk
8. Are the accessible spaces closest to the accessible entrance?	☐	☐	☐	☐ Reconfigure spaces.
9. Are accessible spaces marked with and International Symbol of Accessibility? Are there signs reading "Van Accessible" at van spaces?	☐	☐	☐	☐ Add signs, placed so that they are not obstructed by cars.
10. Is there an enforcement procedure to ensure that accessible parking is used only by those who need it?	☐	☐	☐	☐ Implement a policy to check periodically for violators and report them to the proper authorities.
Team Player Seating Areas	**n/a**	**Yes**	**No**	**Team Player Seating Areas**
☒ Check here if section does not apply to this park and move to next section.				
11. Do fixed team or player seating areas contain the required number of wheelchair spaces and companion seats required by ADAAG?	☐	☐	☐	☐ Renovate as needed ☐ Install accessible seating area ☐ Note
Restrooms	**n/a**	**Yes**	**No**	**Restrooms**
☒ Check here if section does not apply to this park and move to next section.				
12. If rest rooms are available to the public, is at least one rest room (either one for each sex, or unisex) fully accessible?	☐	☐	☐	☐ Reconfigure rest room. ☐ Combine rest rooms to create one unisex accessible rest room. ☐ Note:
13. Are there signs at inaccessible rest rooms that give directions to accessible ones?	☐	☐	☐	☐ Install accessible signs. ☐ Note:
14. Is there tactile signage identifying rest rooms? *Note: Mount signs on the wall, on the latch side of the door, complying with the permanent signage.*	☐	☐	☐	☐ Add accessible signage, placed to the side of the door, 60 inches to centerline (not on the door itself). ☐ If symbols are used, add supplementary verbal signage. ☐ Note:
15. Are pictograms or symbols used to identify rest rooms, and, if used, are raised characters and braille included below?	☐	☐	☐	☐ If symbols are used, add supplementary verbal signage with raised characters and braille below pictogram symbol. ☐ Note:
16. Is the doorway at least 32 inches clear?	☐	☐	☐	☐ Install offset (swing-clear) hinges. ☐ Widen the doorway. ☐ Note:
17. Are doors equipped with accessible handles (operable with a closed fist), 48 inches high or less?	☐	☐	☐	☐ Lower handles. ☐ Replace knobs or latches with lever or loop handles. ☐ Add lever extensions. ☐ Install power-assisted or automatic door openers. ☐ Note:

18. Can doors be opened easily (5 lbf maximum force)?	☐	☐	☐	☐ Adjust or replace closers. ☐ Install lighter doors. ☐ Install power-assisted or automatic door openers. ☐ Note:
19. Does the entry configuration provide adequate maneuvering space for a person using a wheelchair? *Note: A person using a wheelchair needs 36 inches of clear width for forward movement, and a 5-foot diameter clear space or a T-shaped space to make turns. A minimum distance of 48 inches clear of the door swing is needed between the two doors of an entry vestibule.*	☐	☐	☐	☐ Rearrange furnishings such as chairs and trash cans. ☐ Remove inner door if there is a vestibule with two doors. ☐ Move or remove obstructing partitions. ☐ Note:
20. Is there a 36-inch-wide path to all fixtures?	☐	☐	☐	☐ Remove obstructions. ☐ Note:
21. Is the stall door operable with a closed fist, inside and out?	☐	☐	☐	☐ Replace inaccessible knobs with lever or loop handles. ☐ Add lever extensions. ☐ Note:
22. Is there a wheelchair-accessible stall that has an area of at least 5 feet by 5 feet, clear of the door swing, OR is there a stall that is less accessible but that provides greater access than a typical stall (either 36 by 69 inches or 48 by 69 inches)?	☐	☐	☐	☐ Move or remove partitions. ☐ Reverse the door swing if it is safe to do so. ☐ Note:
23. In the accessible stall, are there grab bars behind and on the side wall nearest to the toilet?	☐	☐	☐	☐ Add grab bars. ☐ Note:
24. Is the toilet seat 17 to 19 inches high?	☐	☐	☐	☐ Add raised seat. ☐ Note:
25. Does one lavatory have a 30-inch-wide by 48-inch-deep clear space in front? *Note: A maximum of 19 inches of the required depth may be under the lavatory.*	☐	☐	☐	☐ Rearrange furnishings. ☐ Replace lavatory. ☐ Remove or alter cabinetry to provide space underneath. Make sure hot pipes are covered. ☐ Move a partition or wall. ☐ Note:
26. Is the lavatory rim no higher than 34 inches?	☐	☐	☐	☐ Adjust or replace lavatory. ☐ Note:
27. Is there at least 29 inches from the floor to the bottom of the lavatory apron? (Excluding pipes)?	☐	☐	☐	☐ Adjust or replace lavatory. ☐ Note:
28. Can the faucet be operated with one closed fist?	☐	☐	☐	☐ Replace faucet handles with paddle type. ☐ Note:
29. Are soap and other dispensers and hand dryers within reach ranges (see page 7) and usable with one closed fist?	☐	☐	☐	☐ Lower dispensers. ☐ Replace with or provide additional accessible dispensers. ☐ Note:
30. Is the mirror mounted with the bottom edge of the reflecting surface 40 inches high or lower?	☐	☐	☐	☐ Lower or tilt down the mirror. ☐ Add a larger mirror anywhere in the room. ☐ Note:
Pit Toilets	**n/a**	**Yes**	**No**	**Pit Toilets**
31.				

☒ Check here if section does not apply to this park and move to next section.				
32. Is there a clear space of 60 inches by 60 inches adjacent to the toilet?	☐	☐	☐	☐ Repair as needed ☐ Note:
33. Does the height of the pit toilet riser comply with ADAAG 4.16.3?	☐	☐	☐	☐ Repair as needed ☐ Note:
34. Is the maneuvering space less than or equal to 1:50? (1:33 maximum allowed for drainage)	☐	☐	☐	☐ Repair as needed ☐ Note:
35. If the pit toilet has walls, are grab bars installed consistent with ADAAG 4.16.4?	☐	☐	☐	☐ Repair as needed ☐ Note:
36. Is the surface adjacent to the pit toilet firm and stable?	☐	☐	☐	☐ Repair as needed ☐ Note:
Utilities	**n/a**	**Yes**	**No**	**Utilities**
☒ Check here if section does not apply to this park and move to next section.				
37. Is the maneuvering space less than or equal to 1:50? (1:33 maximum allowed for drainage)	☐	☐	☐	☐ Repair as needed ☐ Note:
38. Is the surface adjacent to the utility firm and stable?	☐	☐	☐	☐ Repair as needed ☐ Note:
39. Are fixed water spouts located 28 inches minimum to 36 inches maximum above the ground or floor space?	☐	☐	☐	☐ Repair as needed ☐ Note:
40. Is the maneuvering space less than or equal to 1:50? (1:33 maximum allowed for drainage)	☐	☐	☐	☐ Repair as needed ☐ Note:
Drinking Fountains	**n/a**	**Yes**	**No**	**Drinking Fountains**
☐ Check here if section does not apply to this park and move to next section.				
41. Is there at least one fountain with clear floor space of at least 30 by 48 inches in front?	☐	☒	☐	☐ Clear more room by rearranging or removing furnishings. ☐ Note:
42. Is there one fountain with its spout no higher than 36 inches from the ground, and another with a standard height spout (or a single "hi-lo" fountain)?	☐	☒	☐	☐ Provide cup dispensers for fountains with spouts that are too high. ☐ Provide accessible water cooler. ☐ Note:
43. Are controls mounted on the front or on the side near the front edge, and operable with one closed fist?	☐	☒	☐	☐ Replace the controls. ☐ Note:
44. Is each water fountain cane-detectable (located within 27 inches off the floor or protruding less than 4 inches from the wall, into the circulation path?	☐	☒	☐	☐ Place a planter or other cane-detectable barrier on each side at floor level. ☐ Note:
Telephones	**n/a**	**Yes**	**No**	**Telephones**
☒ Check here if section does not apply to this park and move to next section.				
45. If pay or public use phones are provided, is there clear floor space of at least 30 by 48 inches in front of at least one?	☐	☐	☐	☐ Move furnishings. ☐ Replace booth with open station. ☐ Note:
46. Is the highest operable part of the phone no higher than 48 inches (up to 54 inches if a side approach is possible)?	☐	☐	☐	☐ Lower telephone. ☐ Note:
47. Does the phone protrude no more than 4 inches into the circulation space?	☐	☐	☐	☐ Place a cane-detectable barrier on each side at floor level. ☐ Note:

48. Does the phone have push-button controls?	☐	☐	☐	☐ Contact phone company to install push-buttons. ☐ Note:
49. Is the phone hearing-aid compatible?	☐	☐	☐	☐ Contact phone company to replace with hearing-aid compatible phone. ☐ Note:
50. Is the phone adapted with volume control?	☐	☐	☐	☐ Contact the phone company to add volume control. ☐ Note:
51. Is the phone with volume control identified with appropriate signage?	☐	☐	☐	☐ Add signage. ☐ Note:
52. If there are four or more public phones in the building, is one of the phones equipped with a text telephone (TT or TDD)?	☐	☐	☐	☐ Install a text telephone. ☐ Have a portable text telephone available. ☐ Provide a shelf and outlet next to phone. ☐ Note:
53. Is the location of the text telephone identified by accessible signage bearing the International TDD Symbol?	☐	☐	☐	☐ Add signage. ☐ Note:

Directional and Informational Signage	**n/a**	**Yes**	**No**	**Directional and Informational Signage**
☒ Check here if section does not apply to this park and move to next section.				
54. If mounted about 80 inches, do they have letters at least 3 inches high, with high contrast, and non-glare finish?	☐	☐	☐	☐ Review requirements and replace signs as needed, meeting the requirements for character size, contrast, and finish. ☐ Note:
55. Do directional and informational signs comply with legibility requirements? 56. (Building directories or temporary signs need not comply.)	☐	☐	☐	☐ Review requirements and replace signs as needed, meeting the requirements for character size, contrast, and finish. ☐ Note:

Seats, Tables and Counters	**n/a**	**Yes**	**No**	**Seats, Tables and Counters**
☐ Check here if section does not apply to this park and move to next section.				
50. Are the spaces for wheelchair seating distributed throughout? (Cover or uncovered gathering areas, bleachers)	☐	☐	☒	☐ Rearrange tables to allow room for wheelchairs in seating areas throughout the area. ☐ Remove some fixed seating. ☐ Note:
51. If picnic tables are provided, are at least 50% and no less than two of the tables, accessible?	☐	☐	☒	☐ Replace as needed ☐ Note: **2 tables with no W/C spaces**
52. Are knee spaces at accessible picnic tables at least 27 inches high, 30 inches wide, and 19 inches deep?	☐	☐	☒	☐ Replace or raise tables. ☐ Note:
53. Are picnic tables spaced such that all areas of the table are accessible?	☐	☒	☐	☐ Rearrange tables to allow room for wheelchairs in seating areas throughout the area. ☐ Remove some fixed seating. ☐ Note:
54. At each type of cashier counter, is there a portion of the main counter that is no more than 36 inches high?	☒	☐	☐	☐ Provide a lower auxiliary counter or folding shelf. ☐ Arrange the counter and surrounding furnishings to create a space to hand items back and forth.

				☐ Note:
55. Is there a portion of food-ordering counters that is no more than 36 inches high, or is there space at the side for passing items to customers who have difficulty reaching over a high counter?	☒	☐	☐	☐ Lower section of counter. ☐ Arrange the counter and surrounding furnishings to create a space to pass items. ☐ Note:
Fire Rings	**n/a**	**Yes**	**No**	**Fire Rings**
☒ Check here if section does not apply to this park and move to next section.				
56. Do all fire rings have a clear space extending a minimum 48" deep by 48" wide at all usable portions of the ring?	☐	☐	☐	☐ Install clear spaces as needed ☐ Note:
57. Are the clear spaces around the fire pit on a firm and stable surface?	☐	☐	☐	☐ Correct as needed ☐ Note:
58. Is the fire surface height a minimum of 9" above the ground/floor?	☐	☐	☐	☐ Construct or renovate pits to meet clearances ☐ Note:
59. Are the slopes around fire pits not more than 1:50?	☐	☐	☐	☐ Construct or renovate pits to meet clearances ☐ Note:
Cooking Surfaces, Grills, Pedestal Grills[2]	**n/a**	**Yes**	**No**	**Cooking Surfaces, Grills, Pedestal Grills**
☒ Check here if section does not apply to this park and move to next section.				
60. Are accessible cooking features dispersed throughout the area and among the types provided?	☐	☐	☐	☐ Evenly disperse cooking features ☐ Note:
61. Are accessible cooking feature surfaces installed between 15 inches and 34 inches above the ground/floor?	☐	☐	☐	☐ Install as required ☐ Note:
62. Do operating controls and mechanisms comply with current ADAAG 4.27.1 (General) 4.27.2 (Clear Floor Space and 4.27.3 (Height)?	☐	☐	☐	☐ Install as required ☐ Note:
Fixed Trash/Recycling Containers	**n/a**	**Yes**	**No**	**Fixed Trash/Recycling Containers**
☒ Check here if section does not apply to this park and move to next section.				
63. Are trash and recycling containers accessible and do they comply with ADAAG 4.27?	☐	☐	☐	☐ Replace as needed ☐ Note:
Overlooks/Viewing Areas	**n/a**	**Yes**	**No**	**Overlooks/Viewing Areas**
☒ Check here if section does not apply to this park and move to next section.				
64. Are all viewing areas on an accessible route?	☐	☐	☐	☐ Install accessible paths as needed ☐ Note:
65. Are all viewing areas constructed to provide an unobstructed view?	☐	☐	☐	☐ Repair as needed ☐ Note:
66. Is there at least one maneuvering space that complies with ADAAG 4.2.3?	☐	☐	☐	☐ Repair as needed ☐ Note:
67. Is the ground surface firm and stable?	☐	☐	☐	☐ Repair as needed ☐ Note:
68. Is the maneuvering space less than or	☐	☐	☐	☐ Repair as needed

[2] Where there is only one cooking surface, grill or pedestal grill in a provided picnic area, it shall be accessible. Where multiple cooking features are provided in a picnic area, 50 percent, but no less than 2 shall be accessible.

equal to 1:50? (1:33 maximum allowed for drainage)				☐ Note:
Telescopes/Periscopes	**n/a**	**Yes**	**No**	**Telescopes/Periscopes**
☒ Check here if section does not apply to this park and move to next section.				
69. Are at least 20%, but not less than one, telescope or periscope that complies with ADAAG 4.27?	☐	☐	☐	☐ Repair as needed ☐ Note:
70. Are the eye pieces usable from a seated position?	☐	☐	☐	☐ Repair as needed ☐ Note:
71. Is the ground surface firm and stable?	☐	☐	☐	☐ Repair as needed ☐ Note:
72. Is the maneuvering space less than or equal to 1:50? (1:33 maximum allowed for drainage)	☐	☐	☐	☐ Repair as needed ☐ Note:
Benches	**n/a**	**Yes**	**No**	**Benches**
☐ Check here if section does not apply to this park and move to next section.				
73. Where multiple benches are provided, are at least 50% consistent with this section?	☐	☒	☐	☐ Repair as needed ☐ Note: **4 benches with armrests**
74. Are accessible benches dispersed evenly throughout the park?	☐	☒	☐	☐ Disperse benches evenly throughout the park ☐ Note: just at play area
75. Of the accessible benches that are provided, do at least 50% of those benches have armrests consistent with ADAAG 4.26.3?	☐	☒	☐	☐ Repair as needed ☐ Note:
76. Are the front edges of accessible benches between 17 and 19 inches maximum above the ground/floor?	☐	☒	☐	☐ Repair as needed ☐ Note:
77. Are floor spaces adjacent to benches consistent with ADAAG 4.2.4?	☐	☒	☐	☐ Repair as needed ☐ Note:
78. Is the ground/floor surface around the accessible benches firm and stable?	☐	☒	☐	☐ Repair as needed ☐ Note:
79. Do all accessible benches have back support the full length of the bench?	☐	☒	☐	☐ Repair as needed ☐ Note:
Playground Equipment Accessibility	**n/a**	**Yes**	**No**	**Playground Equipment Accessibility**
☒ Check here if section does not apply to this park and move to next section.				
80. Is there at least one of each play component on an accessible route[3]?	☐	☐	☐	☐ Expand existing accessible routes as needed ☐ Construct accessible routes ☐ Note: bark surface
81. Is there at least one of each ground-level play component on an accessible route?	☐	☐	☐	☐ Expand existing accessible routes as needed ☐ Construct accessible routes ☐ Note:
82. Are the play components integrated for use by all children; including those with disabilities?	☐	☐	☐	☐ Ensure play components on accessible routes can be used by all children ☐ Note:
Trails	**n/a**	**Yes**	**No**	**Trails**

[3] Different types of play components are based on the general experience provided by the play component. Different types include, but are no limited to, rocking, swinging, climbing, spinning and sliding. Components may be elevated or at or below ground level.

☐ Check here if section does not apply to this park and move to next section.				
83. Is the clear width of the trail 36 inches?	☐	☒	☐	☐ Renovate as required ☐ Construct all new trails to code ☐ Note:
84. Are openings in the trail less than ½ inch? *Note: (Board slat spaces, etc. – Elongated openings should be placed so that the long dimension is perpendicular or diagonal to the dominate direction of travel.)*	☐	☒	☐	☐ Renovate as required ☐ Construct all new trails to code ☐ Note:
85. Is the trail free of constructed or natural barriers?	☐	☒	☐	☐ Remove as needed ☐ Note:
86. Are all overhead hazards maintained at a height that is sufficient for all expected users of the trail? (Remember, Objects that protrude into a pathway at a height greater than 27" are difficult for the blind or persons with visual disabilities who use canes to detect.)	☐	☒	☐	☐ Renovate as required ☐ Construct all new trails to code ☒ Note: **Maintain clearance of tree branches**
87. Is there a segment in the trail that has a 10% grade for more than 30 feet?	☐	☐	☒	☐ Construct level rest interval[4] ☐ Note:
88. Are all cross slopes a maximum of 3%?	☐	☐	☒	☐ Renovate as required ☐ Construct all new trails to code ☒ Note: **Ground at fountains may exceed 3% cross slope for drainage**
89. Are all tread obstacles a maximum of 1"?	☐	☒	☐	☐ Renovate as required ☐ Construct all new trails to code ☐ Note:
90. Are passing spaces (6" x 60") provided at maximum intervals of 200 ft. whenever the clear tread width is less then 60"?	☒	☐	☐	☐ Renovate as required ☐ Construct all new trails to code ☐ Note:
91. Does the trail have or require edge protection?	☒	☐	☐	☐ Renovate as required – Where provided, edge protection should be a minimum of 3". ☐ Construct all new trails to code ☐ Note:
92. Does the trail have signs that clearly indicate the type of use, rules and difficult conditions for the trail?	☐	☐	☒	☐ Renovate as required ☐ Construct all new trails to code ☐ Note:
93. Are there signs that warn users that changes in trail level or tread obstacles could not be removed?	☐	☐	☒	☐ Renovate as required ☐ Construct all new trails to code ☐ Note:
94. Are there detectable warnings anywhere a route crosses a traffic way?	☐	☐	☒	☐ Repair as needed ☐ Note:
Shooting Facilities	**n/a**	**Yes**	**No**	**Shooting Facilities**
☒ Check here if section does not apply to this park and move to next section.				
95. Does the English Pit range have 60-inch diameter space with slopes not steeper than 1:48 so a wheelchair can turn around?	☐	☐	☐	☐ Renovate as needed ☐ Install accessible seating area ☐ Note

[4] Resting intervals must be 60" minimum on length and at least as wide as the widest portion of the trail segment leading to the resting interval with a cross slope that does not exceed 3%.

96. Do the firing benches have a wheelchair accessible area with a bench between 27 and 34 inches with a minimum of 19" leg space?	☐	☐	☐	☐ Renovate as needed ☐ Install accessible seating area ☐ Note
97. If fixed firing positions are provided, at least 5% but not less than one of each type of firing position, must be served by an accessible route. Does English Pit have an accessible route?	☐	☐	☐	☐ Renovate as needed ☐ Install accessible route ☐ Note
98. Does the park have accessible routes to all target impact areas?	☐	☐	☐	☐ Expand existing accessible routes as needed ☐ Construct accessible routes ☐ Note:
Aquatic Recreation Facilities	**n/a**	**Yes**	**No**	**Aquatic Recreation Facilities**
☒ Check here if section does not apply to this park and move to next section.				
99. Is there an accessible route (36" wide) over beach areas that allow access to the water's edge?	☐	☐	☐	☐ Renovate as needed ☐ Install accessible route ☐ Note
100. Are there accessible routes with handrails that lead into designated swim areas such as ponds, lakes, etc.	☐	☐	☐	☐ Renovate as needed ☐ Install accessible route ☐ Note
Fishing piers and Platforms	**n/a**	**Yes**	**No**	**Fishing piers and Platforms**
☒ Check here if section does not apply to this park and move to next section.				
101. Does this park have a facility specifically designed and constructed for fishing?	☐	☐	☐	(Structures that were not built specifically for fishing do not need to meet ADAAG guidelines. Structures designed as fishing piers or platforms, must have an accessible route.)
102. Does the park have a gangway serving the fishing pier or platform?	☐	☐	☐	☐ Install a gangway platform – Gangway 1:12 maximum slope or at least 30 feet long. ☐ Renovate existing platform to meet code (Check specific building codes) ☐ Note
103. Does the gangway have a transition plate to the pier or platform that meets code?	☐	☐	☐	☐ Install a transition plate[5] ☐ Adjust existing transition plate to meet code ☐ Note
104. Does the gangway have handrails?	☐	☐	☐	☐ Install handrail to meet code ☐ Ensure existing rails meet code ☐ Note
105. Does the fishing pier or platform have railings, guards or handrails[6]?	☐	☐	☐	☐ Install as needed ☐ Renovate existing structure to meet code ☐ Note
106. Does the fishing pier or platform have edge protection[i]?	☐	☐	☐	☐ Install ☐ Renovate existing edge protection ☐ Note

[5] Gangways are not required to have to have landings at the end, if transition plates are provided. If the slope of the transition plate is greater that 1: 20 (5%), the transition plates must have a landing at the end of the transition plate not connected to the gangway and must comply with other ramp requirements.

[6] Where railings, guards or handrails are provided on a fishing pier or platform, at least 25 % of the rails must be 34 inches or less in height above the ground or dock so accommodate a person in a wheelchair. These railings must be dispersed as equally as possible to all areas of the fishing pier.

107. Does the fishing pier or platform have clear floor or ground space[ii]?	☐	☐	☐	☐ Install ☐ Renovate existing edge protection ☐ Note
108. Does the fishing pier or platform have sufficient turning space[iii]?	☐	☐	☐	☐ Install ☐ Renovate existing edge protection ☐ Note
Boating Facilities	**n/a**	**Yes**	**No**	**Boating Facilities**
☒ Check here if section does not apply to this park and move to next section.				
109. Is there an accessible route to the boating facilities?	☐	☐	☐	☐ Install ☐ Renovate existing route ☐ Note
110. Does the gangway to the dock or floating dock deigned to provide for a maximum 1:12 (8.33%) slope ? *Note: Not required to be longer than 80 feet. (Elevators may be used in lieu of gangways) In smaller facilities with less than 25 boat slips, the slope of the gangway may exceed 1:12, if the gangway is at least 30 feet long.*	☐	☐	☐	☐ Install ☐ Renovate existing route ☐ Note
111. Does the gangway have a transition plate to the pier or platform that meets code[iv]?	☐	☐	☐	☐ Install a transition plate ☐ Adjust existing transition plate to meet code ☐ Note

<table>
<tr>
<td>112. Where boat slips[7] are provided, does the number of accessible slips[8] comply with the table to the right?
Note: If boat slips at a facility are not identified or demarcated by length, each 40 feet of boat slip edge along the perimeter of a pier will be counted as one boat slip</td>
<td>☐</td>
<td>☐</td>
<td>☐</td>
<td>
<table>
<tr><th colspan="2">Number of Accessible Boat Slips Required</th></tr>
<tr><td>Total Slips in Facility</td><td>Minimum Accessible Slips</td></tr>
<tr><td>1-25</td><td>1</td></tr>
<tr><td>26-50</td><td>2</td></tr>
<tr><td>50-100</td><td>3</td></tr>
<tr><td>101-150</td><td>4</td></tr>
</table>
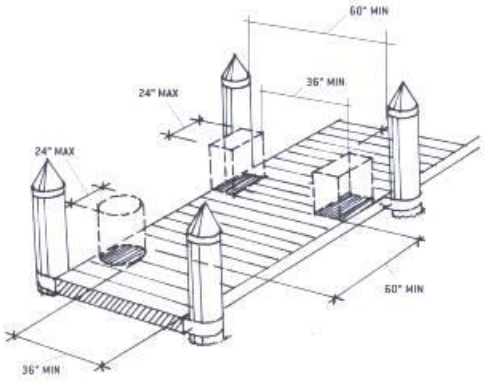

PIER CLEARANCE SPACE REDUCTION
</td>
</tr>
<tr>
<td>If the facility only has a boarding pier (see footnote # 9) at least 5% but not less than, must comply with these guidelines. The entire length of accessible boarding piers must comply with the same provisions that apply to slips.

113. Does this facility meet this regulation?</td>
<td>☐</td>
<td>☐</td>
<td>☐</td>
<td>☐ Install
☐ Renovate boarding pier
☐ Note</td>
</tr>
<tr>
<td>114. Is this facility compromised only of a boat launch with no boarding ramp or pier?</td>
<td>☐</td>
<td>☐</td>
<td>☐</td>
<td>If yes, there are no specific provisions that address access to launch ramps without boarding piers.</td>
</tr>
</table>

[7] A boat slip is the portion of a pier, main pier, finger pier, or float where a boat is berthed or moored, or used for embarking or disembarking. Boarding piers that are not part of a boat launch ramp are classified as “boat slips” for the purpose of this survey.

[8] Accessible boat slips must have clear pier space at least 60 inches wide and as long as the slip. Every 10 feet of linear pier edge serving the accessible slips must have at least one continuous clear opening that is at least 60 inches wide. The width of the clear pier space may be 36 inches wide for a length of 24 inches, as long as multiple 36-inch segments are separated by segments that are 60 inches minimum clear in width and 60 inches minimum clear in length, and the clear openings are at least 60 inches deep. Edge protection is not required

Item Number	Notes

4.2.3* Wheelchair Turning Space. The space required for a wheelchair to make a 180-degree turn is a clear space of 60 in (1525 mm) diameter (see Fig. 3(a)) or a T-shaped space (see Fig. 3(b)). Appendix Note

4.2.4* Clear Floor or Ground Space for Wheelchairs.

4.2.4.1 Size and Approach. The minimum clear floor or ground space required to accommodate a single, stationary wheelchair and occupant is 30 in by 48 in (760 mm by 1220 mm) (see Fig. 4(a)). The minimum clear floor or ground space for wheelchairs may be positioned for forward or parallel approach to an object (see Fig. 4(b) and (c)). Clear floor or ground space for wheelchairs may be part of the knee space required under some objects.

4.2.4.2 Relationship of Maneuvering Clearance to Wheelchair Spaces. One full unobstructed side of the clear floor or ground space for a wheelchair shall adjoin or overlap an accessible route or adjoin another wheelchair clear floor space. If a clear floor space is located in an alcove or otherwise confined on all or part of three sides, additional maneuvering clearances shall be provided as shown in Fig. 4(d) and (e).

4.2.4.3 Surfaces for Wheelchair Spaces. Clear floor or ground spaces for wheelchairs shall comply with 4.5. Appendix Note

4.16.3* Height. The height of water closets shall be 17 in to 19 in (430 mm to 485 mm), measured to the top of the toilet seat (see Fig. 29(b)). Seats shall not be sprung to return to a lifted position. Appendix Note

4.16.4* Grab Bars. Grab bars for water closets not located in stalls shall comply with 4.26 and Fig. 29. The grab bar behind the water closet shall be 36 in (915 mm) minimum. Appendix Note

4.26.3 Structural Strength. The structural strength of grab bars, tub and shower seats, fasteners, and mounting devices shall meet the following specification:

(1) Bending stress in a grab bar or seat induced by the maximum bending moment from the application of 250 lbf (1112N) shall be less than the allowable stress for the material of the grab bar or seat.

(2) Shear stress induced in a grab bar or seat by the application of 250 lbf (1112N) shall be less than the allowable shear stress for the material of the grab bar or seat. If the connection between the grab bar or seat and its mounting bracket or other support is considered to be fully restrained, then direct and torsional shear stresses shall be totaled for the combined shear stress, which shall not exceed the allowable shear stress.

(3) Shear force induced in a fastener or mounting device from the application of 250 lbf (1112N) shall be less than the allowable lateral load of either the fastener or mounting device or the supporting structure, whichever is the smaller allowable load.

(4) Tensile force induced in a fastener by a direct tension force of 250 lbf (1112N) plus the maximum moment from the application of 250 lbf (1112N) shall be less than the allowable withdrawal load between the fastener and the supporting structure.

(5) Grab bars shall not rotate within their fittings.

4.27 Controls and Operating Mechanisms.

4.27.1 General. Controls and operating mechanisms required to be accessible by 4.1 shall comply with 4.27.

4.27.2 Clear Floor Space. Clear floor space complying with 4.2.4 that allows a forward or a parallel approach by a person using a wheelchair shall be provided at controls, dispensers, receptacles, and other operable equipment.

4.27.3* Height. The highest operable part of controls, dispensers, receptacles, and other operable equipment shall be placed within at least one of the reach ranges specified in 4.2.5 and 4.2.6. Electrical and communications system receptacles on walls shall be mounted no less than 15 in (380 mm) above the floor. Appendix Note

EXCEPTION: These requirements do not apply where the use of special equipment dictates otherwise or where electrical and communications systems receptacles are not normally intended for use by building occupants.

4.27.4 Operation. Controls and operating mechanisms shall be operable with one hand and shall not require tight grasping, pinching, or twisting of the wrist. The force required to activate controls shall be no greater than 5 lbf (22.2 N).

---

[i] Where railings, guards or handrails are provided, edge protection must be provided and extended a minimum of 2 inches above the ground or deck surface. Edge protection is not required where a railing, guardrail or handrail is provided, if the deck surface extends a minimum of 12 inches beyond the inside face of the railing.

[ii] At least one clear floor or ground space (30 inches by 48 inches) must be provided at each location that has a railing height of 34 inches maximum. If there is no railing, at least one clear space must be provided on a pier or platform.

[iii] Fishing piers and platforms must have at least one turning area, either 60-inch turning space or a T-shaped space to allow a person using a mobility device or wheelchair to make a 180-degree turn.

[iv] Gangways are not required to have to have landings at the end, if transition plates are provided. If the slope of the transition plate is greater that 1: 20 (5%), the transition plates must have a landing at the end of the transition plate not connected to the gangway and must comply with other ramp requirements.